SNACK VENDING MACHINE
models FOODBOX TOUCH, FOODBOX LONG TOUCH, FOODBOX LIFT TOUCH

USER MANUAL

Version 1.3 / December 2018

The vending machine manufacturer: KRAFT LLC

The Russian Federation

199155, Saint-Petersburg

Uralskaia St. 13, lit. A

Tel.: (812)449-09-91

Fax: (812)350-70-89

www.unicum.ru

Original language - Russian

CONTENT

1.0 GENERAL INFORMATION 4
2.0 SAFETY 6
3.0 SPECIFICATIONS 7
4.0 VENDING MACHINE DESCRIPTION 8
4.1 Interior 8
4.2 Control compartment 9
4.3 Selling process 10
4.4 Vending machine components 11
4.4.1 Giving out compartment 11
4.4.2 Control compartment 11
4.4.3 Touch screen 11
4.4.4 Lock 12
5.0 INSTALLATION 13
5.1 Location selection 13
5.2 Safety precautions 14
5.3 Installation 14
5.4 Electrical connection 15
5.5 Wall mounting 15
5.6 Vending machine activation 16
5.7 Vending machine deactivation 16
5.8 Products loading 17
6.0 COOLING UNIT 18
6.1 Operating Modes 18
7.0 CONTROL 20
7.1 Controller board 20
7.2 Service buttons 22
8.0 USER MENU 23
9.0 SERVICE MENU - MENU TECHNICIAN 25
9.1 System 27
9.1.1 General 27
9.1.2 Security 28
9.1.3 Franchising 29
9.1.4 Resets 30
9.1.5 Power 31
9.1.6 EVA-DTS 32
9.1.7 Modem 33
9.1.8 Ethernet 35
9.1.9 About 36
9.2 Snack 37
9.2.1 Service 37
9.2.2 Setup 38
9.2.3 Thermal setup 42
9.3 Payment Systems 45
9.3.1 Changer 45
9.3.2 General Setup 47
9.3.3 Change Setup 48
9.4 Errors 50
10.0 SERVICE MENU - OPERATOR MENU 52
11.0 LOADING PRODUCT IMAGES TO VENDING MACHINE 52
12.0 CHANGING THE CONFIGURATION OF SHELVES 54
13.0 MAINTENANCE 59

1.0 GENERAL INFORMATION

The manual contains the general information about vending machines and their software, necessary for their commissioning, operation, maintenance, as well as the general information about vending machine software.

The manual is written for engineering and technical personnel, conducting vending machine maintenance and authorized for working with this type of electrical installations.

Failure to comply with the manual requirements may lead to injuries, damage to the equipment and result in discontinuation of warranty obligations. Before installing and using the vending machine carefully read the requirements put down in this manual, because it contains critical information about the safe installation and operating and maintenance instruction.

Knowledge of safety regulations requirements is necessary for teaching the users to correctly operate vending machines.

The vending machine customer is responsible for proper training and informing the service personnel, and controlling the fulfilment of technical documentation requirements.

The vending machine manufacturer denies any responsibility for any injuries and damages resulting from the following circumstance:

- unauthorized modernization;
- incorrect installation;
- incorrect connection to the power supply;
- inadequate cleaning and servicing;
- misuse of the vending machine equipment;
- the use of non-original spare parts.

Under no circumstances the manufacturer is obligated to compensate the possible damage, resulting from the forced shut down of the vending machine as a result of a malfunction.

The vending machine models: Foodbox Touch, Foodbox Long Touch и Foodbox Lift Touch are intended for retail selling and storage in the specified temperature regime the previously packed food products (snacks) and cold drinks. The Foodbox Lift Touch model uses a lift for more careful giving out of products.

Vending machines use a touch screen with graphic user menu interface in the selling mode and a service menu in the vending machine servicing mode.

Products recommended for loading into the vending machine:

- The piece goods in sealed package, ruling out the possibility of spilling crisps, breakfast cereals, meat snacks, baked breads, chocolate bars, packed cookies, packed peanuts, packed croissants, etc.);
- Drinks in plastic and TetraPak packaging up to 0.5 l in capacity;
- Drinks in aluminum cans up to 0.33 l in capacity;
- Drinks in plastic bottles up to 0.5...0.6 l in capacity.

Not recommended for loading into the vending machine:

- Products and drinks in glass containers;
- Products in packaging which does not exclude the possibility of the contents spillage;
- Products without packaging;
- Dairy products in soft packaging.

Manufacturer's warranty

The manufacturer's warranty during the warranty period covers all vending machine units and assemblies, except for malfunctions, arising from non-observance of current maintenance documentation requirements by the customer or due to any mechanical failures.

The following components are excluded from the manufacturer's warranty:

- Fuses;
- Control board batteries.

2.0 SAFETY

For safe operation of the vending machine comply with the rules given below:

- before starting the vending machine operation read and understand this manual;

- the vending machine can be used for selling the cold drinks in plastic bottles and cans and packed snacks;

- during the transportation and technical maintenance follow the requirements given in this manual;

- the vending machine should be installed on a level surface;

- the vending machine installation and maintenance should be carried out by qualified technicians only;

- the vending machine is not intended for use by persons (including children) with physical, sensory or intellectual limitations, unless they are under the supervision of a person, responsible for their safety, or were instructed of how to use the vending machine;

- if the power cord is damaged the vending machine cannot be used. The power cord should be replaced by skilled technician only;

- never connect or disconnect the vending machine power plug with wet hands;

- the vending machine is intended for operation indoors only at the ambient air temperature from 5 to 35°C, relative air humidity up to 80% at 25°C, and atmospheric pressure from 84.0 to 106.7 kPa (630-800 mmHg);

- the vending machine should not be transported when loaded with products;

- don’t clean the vending machine by pressure water jets;

- use genuine spare parts only;

- when connecting the vending machine to the power network the use of adapters, extenders and multi-pin plugs are prohibited;

- switching on several vending machines by using one switch at the central electric panel is prohibited. This may damage the vending machines;

- connecting the vending machine to the power network without grounding is prohibited;

- any vending machine changes or modifications without manufacturer’s notification are prohibited! Otherwise, the manufacturer assumes no warranty liabilities.

3.0 SPECIFICATIONS

Vending machine

Parameters	Foodbox Touch	Foodbox Long Touch	Foodbox Lift Touch
Height, no more than	1850 mm	1850 mm	1850 mm
Width, no more than	1000 mm	1280 mm	1020 mm
Depth, no more than	820 mm	820 mm	820 mm
Weight, no more than	300 kg	370 kg	300 kg
Electrical connection	~230 В/50 Гц	~230 В/50 Гц	~230 В/50 Гц
Power consumption	max. 700 W	max. 700 W	max. 700 W
Environmental Limits	+ 5...+35 ^{0}C	+ 5...+35 ^{0}C	+ 5...+35 ^{0}C

Cooling unit

- cooling agent (coolant) - R134a;
- ventilated evaporator;
- the adjustable temperature in the refrigerated zone: from 4 to 10 °C.

4.0 VENDING MACHINE DESCRIPTION

4.1 Interior

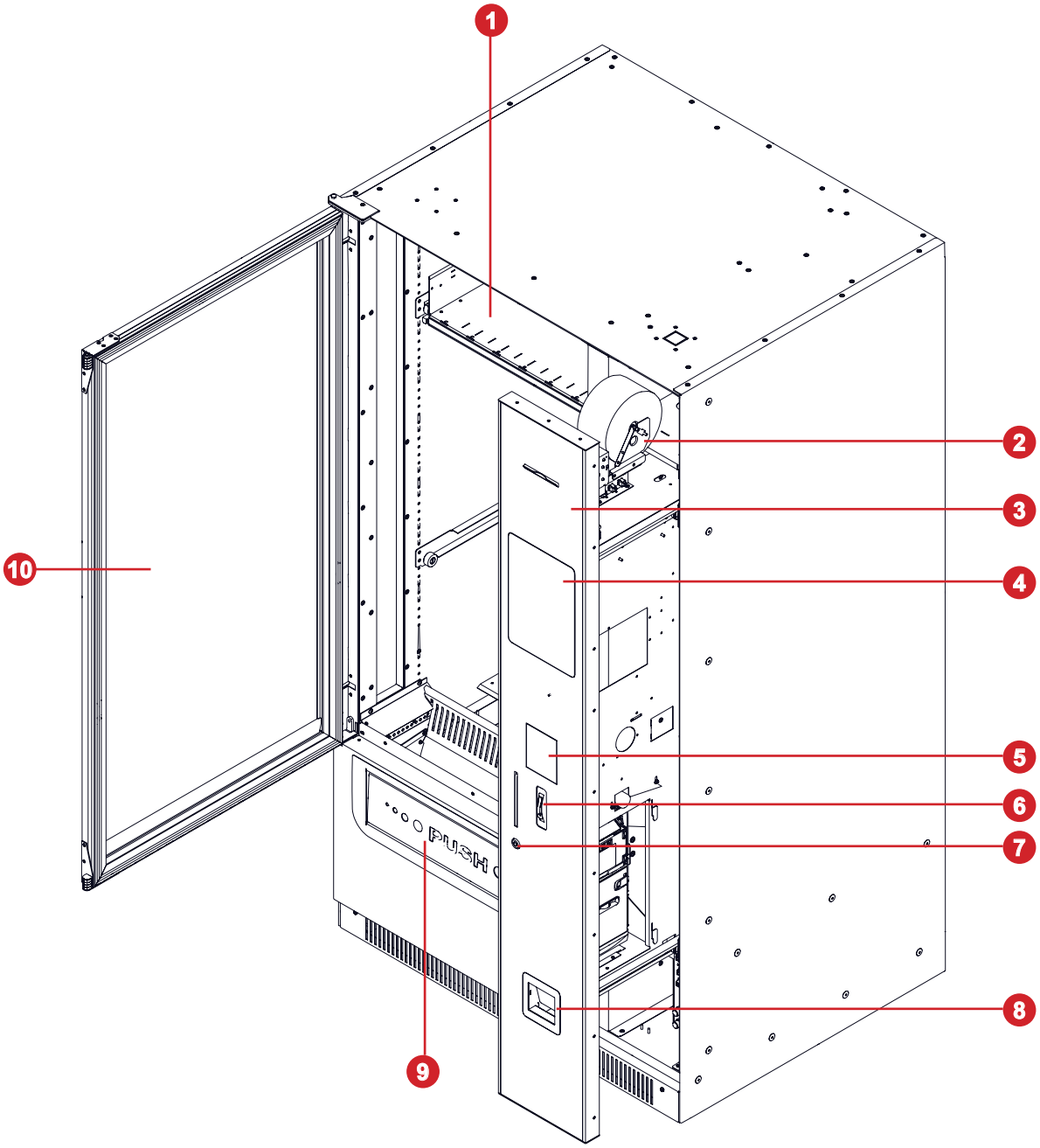

Figure 1

1	Shelf for products	6	Slot for coins
2	Printer for receipts (option)	7	Lock
3	Control compartment	8	Change tray (coins)
4	Touch screen	9	Product dispensing tray
5	Slot for bills/plug	10	Door

NOTE: The Foodbox Lift Touch model uses a lift for more careful products giving out.

4.2 Control compartment

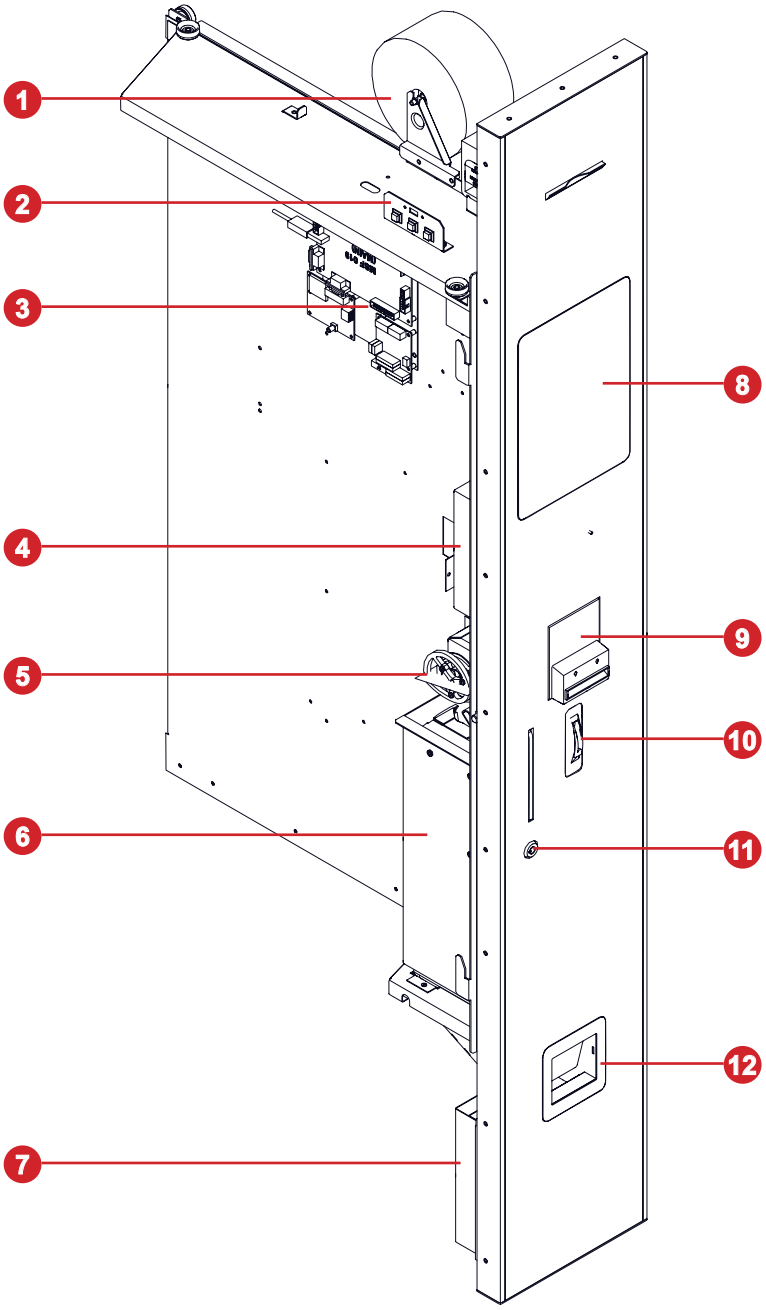

Figure 2

1	Printer for receipts (option)	7	Box for coins
2	Service buttons + USB PC connector	8	Touch screen
3	Control boards	9	Slot for bills/plug
4	Cash acceptor	10	Slot for coins
5	Change giving out motor (option)	11	Lock
6	Coin drawer	12	Change tray (coins)

4.3 Selling process

In fig. 3 the products selling algorithm that is implemented in the vending machine is shown.

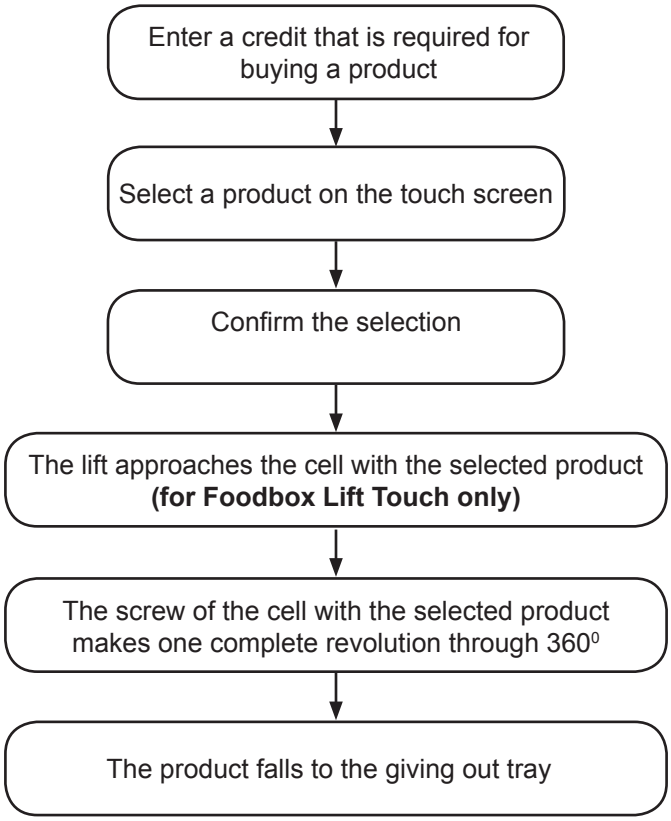

Figure 3

4.4 Vending machine components

4.4.1 Giving out compartment

Product dispensing compartment occupies the largest volume of the vending machine and is closed by a glass door, which is blocked by a slide-out panel of the control compartment.

The product dispensing compartment dimensions allow installing up to 6 (optionally - up to 8) shelves with cells of different configurations:

• cells for wide products with two synchronously rotating spirals (double cells);
• single cells with one spiral;
• one-and-a-half cells with one spiral.

Shelves are designed in such a way that they can be easily slid in and out for quick loading/unloading the products. Shelves are closed by the door with a glass unit. Products by using the spirals are fed to the product dispensing tray. Optical sensors located at the dispensing tray register the product release. The customer takes the product from the tray. In the lower part of the vending machine, there's a ventilation casing.

In the lower part of the dispensing compartment, there's a cooling unit, maintaining the product storage temperature conditions that are preset by the user.

4.4.2 Control compartment

The control compartment is a rectangular metal compartment, isolated from the product dispensing compartment. The control compartment is closed by a slide-out panel. The control compartment accommodates the following:

- the vending machine main control board (hereinafter - the controller);
- payment systems (cash acceptor, coin drawer, card reader);
- control boards;
- power pack;
- receipt printer;
- coin box;
- touch screen.

NOTE: depending on your order the presence or absence of these elements is possible.

Control compartment panel, as well as product dispensing compartment door, are closed by using a lock.

4.4.3 Touch screen

On the front panel of the control compartment, there's a touch screen. In the selling mode, the user interface is displayed, by which the customer can buy the desired product in the vending machine. The screen is also used for displaying all functional messages.

In the service mode, the screen displays the menu technician or operator menu with the necessary settings.

4.4.4 Lock

The vending machine is supplied with the RIELDA lock, which can be programmed for the required key set that permits using one work key for several RIELDA locks at once, as well as easily change any lock combination for the new work key in case of old key loss, theft or breakage.

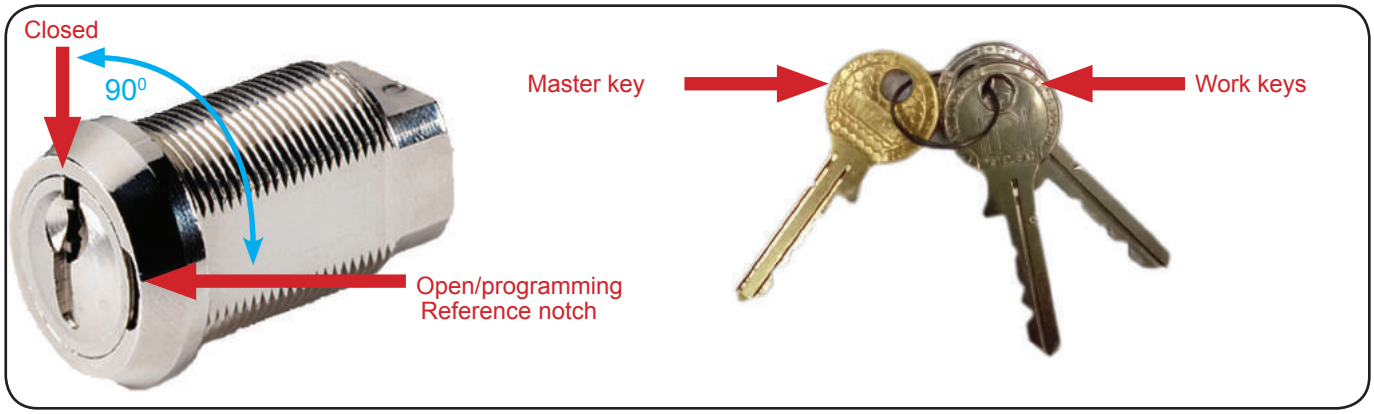

Figure 4

The lock is supplied together with three keys (fig. 4):

- one master key - a ***GOLDISH*** key used only for lock programming;
- two work keys - ***SILVERY*** keys used for the vending machine door opening/closing.

The lock may be in two positions:

- working position (“locked” position - fig. 4);
- programming position (“open” position - fig. 4).

The vending machine is supplied with a ready-programmed lock. To open/close the vending machine door insert the SILVERY work key (sfig. 4) and turn it in the lock by 90° in the required position (fig. 4).

ATTENTION!
The lock programming operations should be executed with the vending machine door open! Otherwise, the door will be locked by a latch.
To return the lock to the programming position only use the master key, used for the latest programming!

To program the lock for another work key (e.g. for using one work key for several vending machines or in the case of the work key loss) it's necessary to execute the following operations with the vending machine door ***OPEN:***

- insert the master key («close» position - fig. 4), by which the lock was the last time programmed or the one that was supplied with the lock (for initial programming), into the lock. Secure the master key in the lock for at least 1 second. Then turn the key by 900 in the direction of the reference notch (fig. 4).
- while holding shutting off device of the door in order to avoid a spontaneous turn of the lock, remove the master key from the lock and insert them into the new master key , which you want to program the lock. If you want to program the lock on the same master key, don’t remove the master key from the lock.
- then turn the master key by 90° to the opposite direction («closed» position - fig. 4).
- take out the master key from the lock and put it in a safe place. To open/close the lock use the work keys supplied with your new master key.

5.0 INSTALLATION

5.1 Location selection

When selecting a location for the installation of the vending machine take into consideration the following:

- the vending machine is not intended for operation in the open air and should be installed only inside dry premises with the ambient temperature maintained in the working range (see specifications).

- for the installation of the vending machines in the open air use the additional heating and put the vending machine into the special casing (thermal box).

- the vending machine shouldn't be exposed to direct sunlight.

- the surface for the vending machine installation should be hard and flat.

- the vending machine door should open entirely.

- it's prohibited to install the vending machine with an inclination exceeding 2°.

- it's prohibited to install the vending machine on carpeting or other electrostatic coatings.

- it's prohibited to close ventilation slots in the vending machine case.

- when installing the vending machine in the heated spaces it should be located no less than 1 m away from heating appliances.

- the distance from the vending machine rear wall to other objects should be no less than 0.1 m.

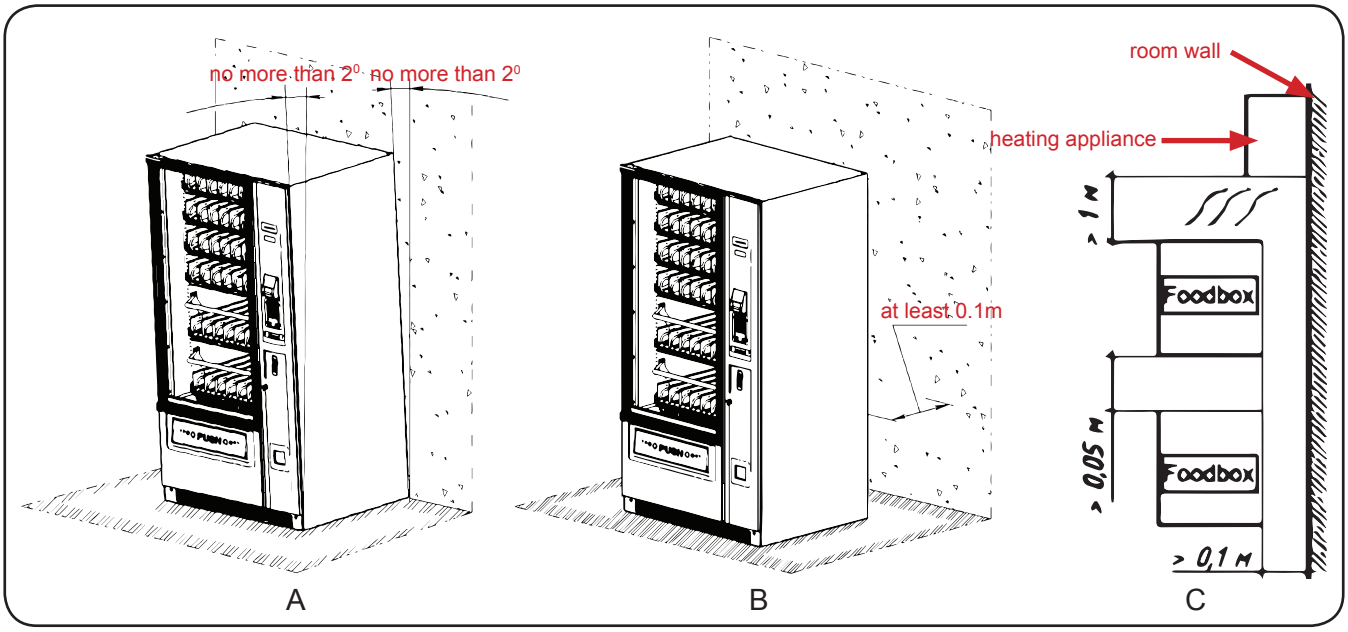

Figure 5 - Vending machine installation

5.2 Safety precautions

When transporting the vending machine to the installation location use mechanical or automatic fork loader.

- the vending machine should be transported in a vertical position on its own base;

- it's forbidden to drop and overturn the vending machine;

- it's forbidden to use ropes, strands, cables, etc. for the vending machine movement;

- before moving the vending machine make sure that the power cord is disconnected from the mains;

- after transportation of the vending machine for long distances at which it was exposed to high level of vibration or impacts, check the contact connections between the elements and functional nodes, as well as the mounting of the elements and functional nodes.

5.3 Installation

Remove the shipping package and packaging material from the vending machine. Contact the supplier if the vending machine has any visible damaged:

- before the first activation, hold the vending machine in the premise at room temperature for at least 5 hours. Make sure there's no condensate on the vending machine internal elements and, in particular, on the touch screen and door;
- carefully move the vending machine by using the fork loader to the placement location and lift it for 20...30 cm;
- secure the loader;
- by using a S=10 mm spanner unscrew the fastening bolts and remove the wooden supports. It's recommended to put bolts with washers and wooden supports into a plastic bag together with packaging for storage;
- take four supporting feet, packed for the duration of transportation into the product dispensing tray, unpack them and screw into the holes in the vending machine base corners;
- lower the vending machine to the placement location and remove the forklift from under the machine;
- by using a S=34 mm spanner adjust the supporting feet, so that the vending machine is level in a horizontal plane;
- use a level for ensuring the level installation;
- after the vending machine installation and levelling take the ventilation cover, packed for the duration of transportation into the product dispensing tray, and install it on the vending machine by using the screws from the fitting kit (fig. 6).

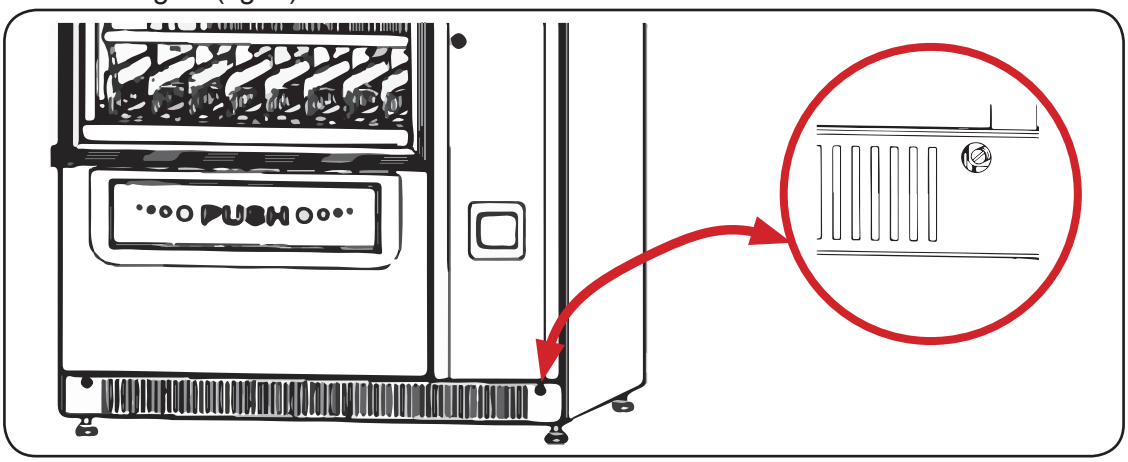

Figure 6- Installation of ventilation cover

ATTENTION!
To prevent the vending machine from overturning it's prohibited to open the vending machine doors and pulling out the shelves until the vending machine is securely fixed on the mounting surface!

5.4 Electrical connection

The vending machine is supplied ready for connection by using a power cord to a ~230 V / 50 Hz single-phase AC power circuit. The vending machine should be connected to the wall outlet with grounding contact.

After the electrical connection, the vending machine plug should be accessible.

5.5 Wall mounting

The vending machine design permits its mounting to the wall. The wall mounting helps preventing the vending machine from overturning in the cases of damaging and breaking.

To mount the vending machine to the wall:

- take the rests and self-tapping screw packed for the duration of transportation into the product dispensing tray;

- fix the rests to the vending machine by using four screws;

- move the vending machine close to the wall;

- mark the location of mounting holes by a marker;

- move the vending machine away from the wall and drill 2 blind holes for the screw plugs installation;

- install the screw plugs and move the vending machine to the wall, so that the fixing holes in the wall match with the holes in the rests. Then fix the vending machine by using self-tapping screws.

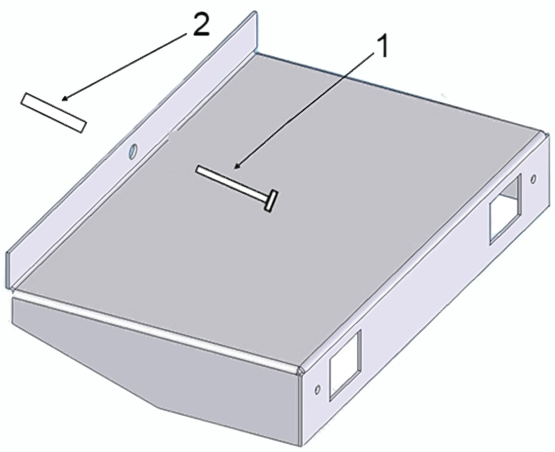

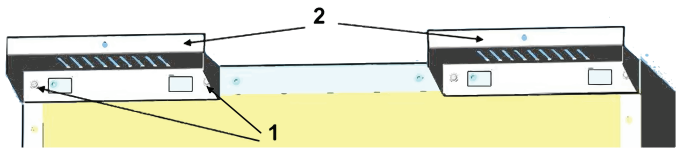

1 - Self-tapping screw

2 - Screw plug

Figure 7 - Vending machine wall mounting

Note: When fixing the vending machine to the wall, at the first place fix the wall mount rests to the vending machine, and only then proceed fixing the vending machine to the wall!

5.6 Vending machine activation

To activate the vending machine proceed as follows:

- connect the power cords in accordance with fig. 8;

- plug the power cord into an electrical outlet;

- open the control compartment door (see section 4.4.4);

- set the MAINS switch to ON position;

- close the control compartment door.

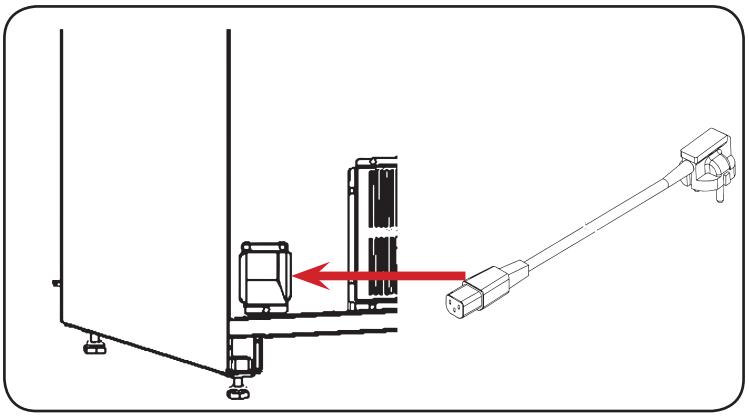

Figure 8 - Power cord connection

5.7 Vending machine deactivation

To deactivate the vending machine proceed as follows:

- open the control compartment door (see section 4.4.4);

- set the MAINS switch to OFF position;

- close the control compartment door;

- disconnect the power cord plug from the electrical outlet.

5.8 Products loading

After the completion of installation and vending machine adjustment load the vending machine with products:

- open the vending machine door, so it does not interfere with shelves moving-out;
- pull the shelf latch, located on the left, following which pull out the shelf up to the stop by firmly holding the shelf by its lower part. To facilitate loading the upper shelves are inclined when pulled out (fig. 9);

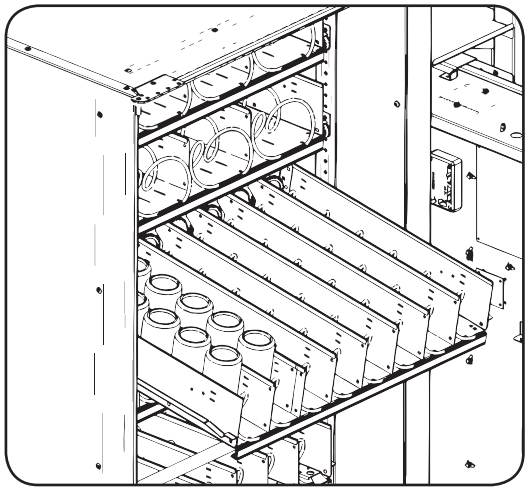

Figure 9 - Shelves loading

- start loading from the front, don't leave hollow spaces. Insert the products from above between the spiral turns. The label with product name should be turned towards the showcase, so it's well seen by the customer. The products shouldn't be squeezed between the spiral turns;
- after the loading fit the shelves back into the vending machine up to the fixed position;
- put the price tags into the groove for price tags (fig.10).

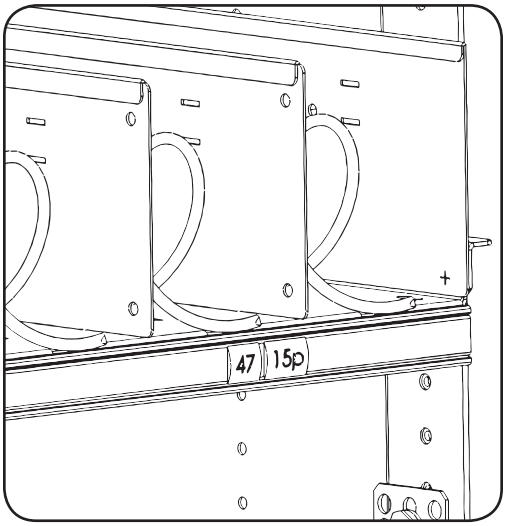

Figure 10 - Price tags installation

ATTENTION!
To prevent the vending machine overturning pull out one shelf at a time, goods should be laid in such a way, that the space for falling into the product dispensing tray is free from protruding parts of other products or shelves! The shelves should be pushed all the way back!

6.0 COOLING UNIT

The cooling unit performance control is executed by scanning 3 temperature sensors:
- sensor No.1 - is located in the lower part of the product dispensing tray;
- sensor No.2 - is located in the upper part of the product dispensing tray;
- sensor No.3 - is located on the cooling unit evaporator (fig. 11).

Notice:

Recommended temperature settings:
- min. temperature 4±2°C;
- max. temperature 10±2°C;
- min. evaporator temperature 1 ± 1°C;
- max. evaporator temperature 5 ± 1°C.

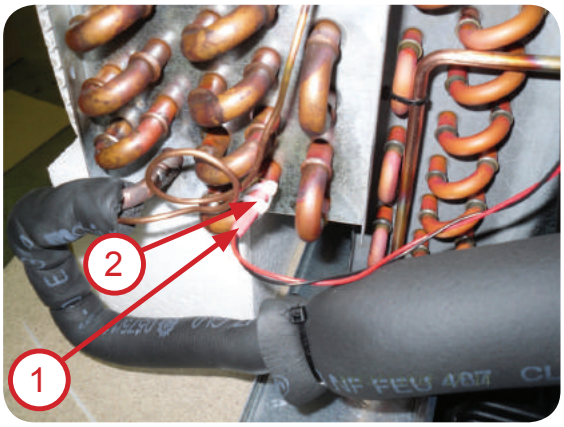

1 - Temperature sensors

2 - Buckles

Figure 11 - Location of temperature sensor No. 3

ATTENTION!
To maintain the correct operating mode of the cooling unit, it's important that the temperature sensor No. 3 is installed correctly. It should be securely fixed on the next to last evaporator elbow as shown in fig. 4. The sensor installation should be executed outside the vending machine. After placing the cooling unit inside the vending machine the sensor connector should be connected to the temperature sensor wiring harness.

6.1 Operating Modes

The cooling unit operating mode control is executed by the vending machine controller. There are 4 modes of the cooling unit operation:
- standby;
- defrosting;
- cooling;
- anti-icing.

In each mode there are the cooling unit activation and deactivation, evaporator fan activation, and deactivation, temperature sensors monitoring.

When activating the vending machine the cooling unit is switched to a ***STANDBY*** mode for two minutes. The further operation is taken place in accordance with the stabilized condition algorithm.

If when activating the vending machine the evaporator temperature (sensor No.3) is lower than the evaporator temperature minimum value, the controller is switched to ***DEFROSTING*** mode. When the temperature at this sensor reaches the minimum value or higher, the cooling unit switches to ***STANDBY*** mode.

Standby

In the standby mode, the cooling unit is deactivated, the evaporator fan operates in accordance with the user-defined mode, and the temperature sensors are monitored.
If the temperature at sensor No.1 exceeds the value, specified in the (***Max. temperature***) menu item, and the defrosting time is expired - the unit switches to ***COOLING*** mode.

Defrosting

In the defrosting mode, the cooling unit is deactivated, the evaporator fan operates in accordance with the user-defined mode, the temperature sensors are monitored.

The duration of the defrosting mode is determined by defrosting time, specified in the (***Defrosting time***) service menu item. Upon completion of the specified time period the unit switches to ***STANDBY*** mode. The duration of defrosting is also affected by sensor No. 3 - at the evaporator temperature below the minimum value the unit switches to the defrosting mode or remains in this mode until the evaporator temperature exceeds the minimum value.

Cooling

In the cooling mode, the unit is activated, the evaporator fan operates in accordance with the user-defined mode, the temperature sensors are monitored.

The cooling unit operating time may not exceed 30 minutes. Upon expiration of this period the unit is deactivated and after the additional two minutes the controller switches to ***STANDBY*** mode.
In the cases, if during the cooling unit operation the temperature at sensor No.1 lowered down to the temperature, specified in (***Min. temperature***) menu item, the unit is deactivated and after the additional two minutes, it switches to STANDBY mode.

If the temperature at sensor No. 3 is below the value specified in (***Min. evaporator temp.***) menu item, the cooling unit is deactivated and switches to ***ANTI-ICING*** mode

Anti-icing

The anti-icing mode is used for preventing the cooling unit icing. In this mode the unit is deactivated, the temperature value at sensor No.3 is monitored.

Upon reaching the value preset in the (***Evaporator max. temp.***) menu item, the controller switches to the ***STANDBY*** mode. To reduce the possibility of icing use the recommended values of temperature settings.

Evaporator fan

The evaporator fan operation mode can be changed by choosing the required mode in the service menu (***menu item Fan control***):

- always on (***menu item Always on***);
- activated only in the cooling mode (***menu item only when cooling)***;
- the fan operates in the cooling and defrosting modes (***menu item Cooling and defrosting***).

When activating the vending machine the evaporator fan is activated automatically, regardless of its operating settings. When changing the cooling unit operation to ***COOLING*** or ***DEFROSTING*** mode the fan will operate in accordance with the selected mode.

7.0 CONTROL

7.1 Controller board

Controlling the operation of vending machine assemblies and equipment is executed by the control board (hereinafter – controller), which is located in the control section (fig. 2 pos. 3).

The vending machine can operate in two modes in accordance with the embedded software algorithm - the control program (hereinafter – firmware):

- sales mode (main operating mode);
- service mode (designed for specialists).

The main mode of operation is the sales mode. In this mode, the customer service is carried out (products selling, storage and giving out). Entry in this mode is realized immediately after the controller activation.

The service mode is intended for testing the vending machine equipment, setting the parameters of assemblies and equipment, controlling the vending machine critical parameters, price management. Changing to the service mode is executed by pressing the service keys (see above).

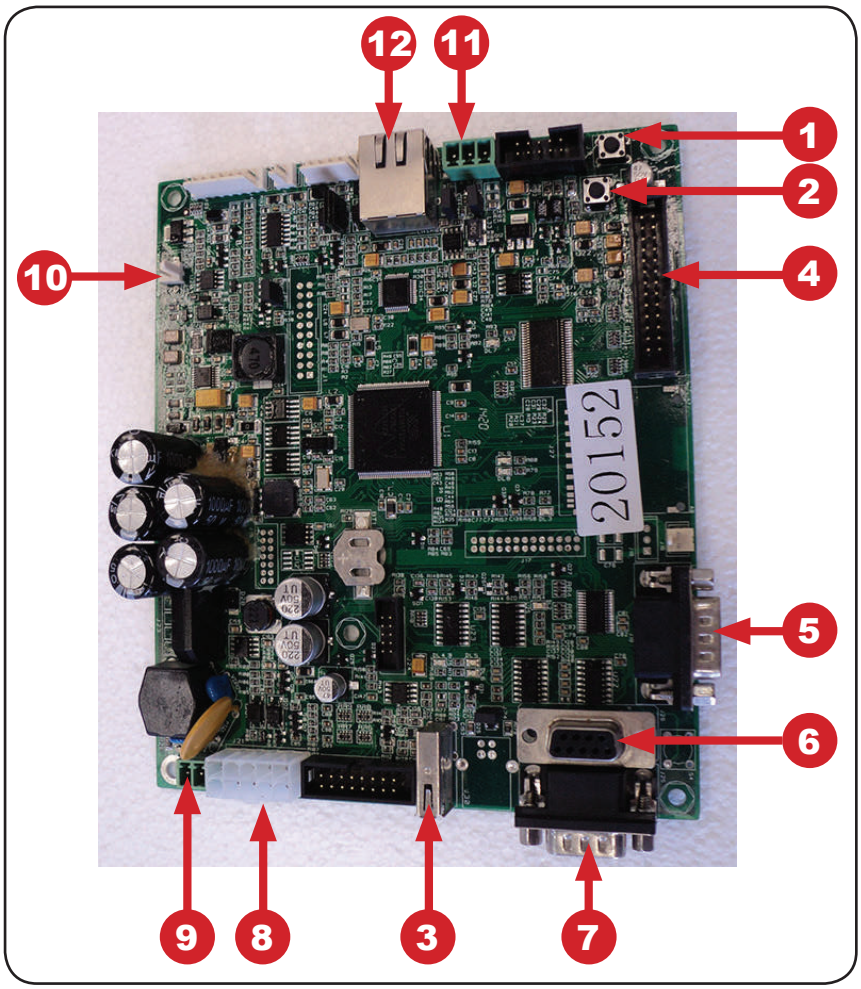

Figure 12 - Main Board (controller)

1. A button for accessing the operator menu (used as a backup button in the cases when the service button is not connected).
2. A button for accessing the menu technician (used as a backup button in the cases when the service button is not connected).
3. USB-flash drive connector.
4. The connector is not used.
5. Modem connector.
6. RS232 card reader connector.

7. The connector is not used
8. Modem power and MDB payment system connector
9. Controller board power connector (~24V)
10. The connector is not used
11. Power board connector (CAN-BUS)
12. Vending machine PC unit connector (Ethernet)
13. The connector is not used
14. The connector is not used

The vending machine controller permits conducting the vending machine setting, software updating and collecting the statistics by means of file interchange via the USB-flash drive.

The drive is connected to the USB connector, located on the controller board (fig. 12). The connection should be carried out in the sales mode. When connecting the drive the touch screen will display the relevant messages about the drive operation.

ATTENTION! The vending machine accepts USB-flash drives only! Disk drive and flash-disks are not supported. Only USB-flash drives with FAT16 or FAT32 file systems are supported. Other file systems (including NTFS) are not supported.

Information that may be read from the USB-flash drive from the vending machine:

1. ***Statistics (Audit):*** The information about the vending machine operation, sales, equipment operation, events. is saved to files in the EVA-DTS format, file name: Axxmmddi.DTS

- xx = the 2 last digits of the vending machine serial number;
- mm = month (if date and time are set in the vending machine menu);
- dd = date (if date and time are set in the vending machine menu);
- i = a number in the range from 0 to 9. You can save up to 10 files with different names within 24 hours.

To read the information insert the USB-flash drive into the controller board connector while in sales mode and confirm the ***Save audit?*** request.

2. ***Current configuration:*** File in the EVA-DTS format. Filename: cxxxxxxx.DTS, then the 7-digit vending machine number, (e.g.: c0000123.DTS).

The file contains the information about the equipment configuration, as well as the information about the products placement, names, and prices.

To read the information insert the USB-flash drive into the controller board connector while in sales mode and confirm the ***Record configuration?*** request.

Information that may be loaded from the USB-flash drive into the vending machine:

1. ***Configuration for the specific vending machine***: File in the EVA-DTS format. File mane: cxxxxxxx.DTS, then the 7-digit vending machine number. The file will be loaded into the vending machine only if it matches the number and in the file name. This permits loading different configurations for different vending machines from one USB-flash drive.

To load the information insert the USB-flash drive into the controller board connector while in sales mode and confirm the ***Load configuration?*** request.

2. ***General configuration***: File in the EVA-DTS format. Filename: CONF_GEN.DTS. The file can be loaded into the vending machine with any number.

To load the information insert the USB-flash drive into the controller board connector while in sales mode and confirm the ***Load the main configuration?*** request.

3. ***Software updating***: To update the vending machine software visit the manufacturer's web-site http://**www.unicum.ru** and in the DOCUMENTATION section select on the opened page the necessary model of the vending machine for updating the software. Then on the opened page select the CONTROLLER FIRMWARE section, following which the file downloading to the computer starts. The files are downloaded in the form of an archived folder. To record these files to the USB-flash drive extract the folder and save the folder contents to the USB-flash drive root directory. In the archived folder, there are files for updating the vending machine software with the explanatory text files.

To update the vending machine insert the USB-flash drive with the saved files into the controller board USB connector. After these files are recognized by the controller the display will show the proposal to update the software.

To load the power board software confirm the request: Load shack software?

To load the controller board software confirm the request: Load software?

Editing the configuration files, as well as viewing the audit files is realized by using the special Unicum Vending Machine Tools program, which can be downloaded from the following link:
https://uonline.unicum.ru/ef/tools/uVMTools.msi

7.2 Service buttons

When the control compartment is pulled out, from above the control compartment the three service buttons + USB connector become available (fig. 2 pos. 2).

The buttons have the following functions:

- ***operator menu*** - to enter the operator menu;
- ***menu technician*** - to enter the menu technician;
- ***test*** - the products giving out mode without payment (for testing the vending machine operation).
- ***the USB PC connector*** – for connecting the USB-flash drive to the vending machine PC (monoblock).

8.0 USER MENU

User menu description

In the sales mode, the vending machine touch screen displays the user menu (see below).

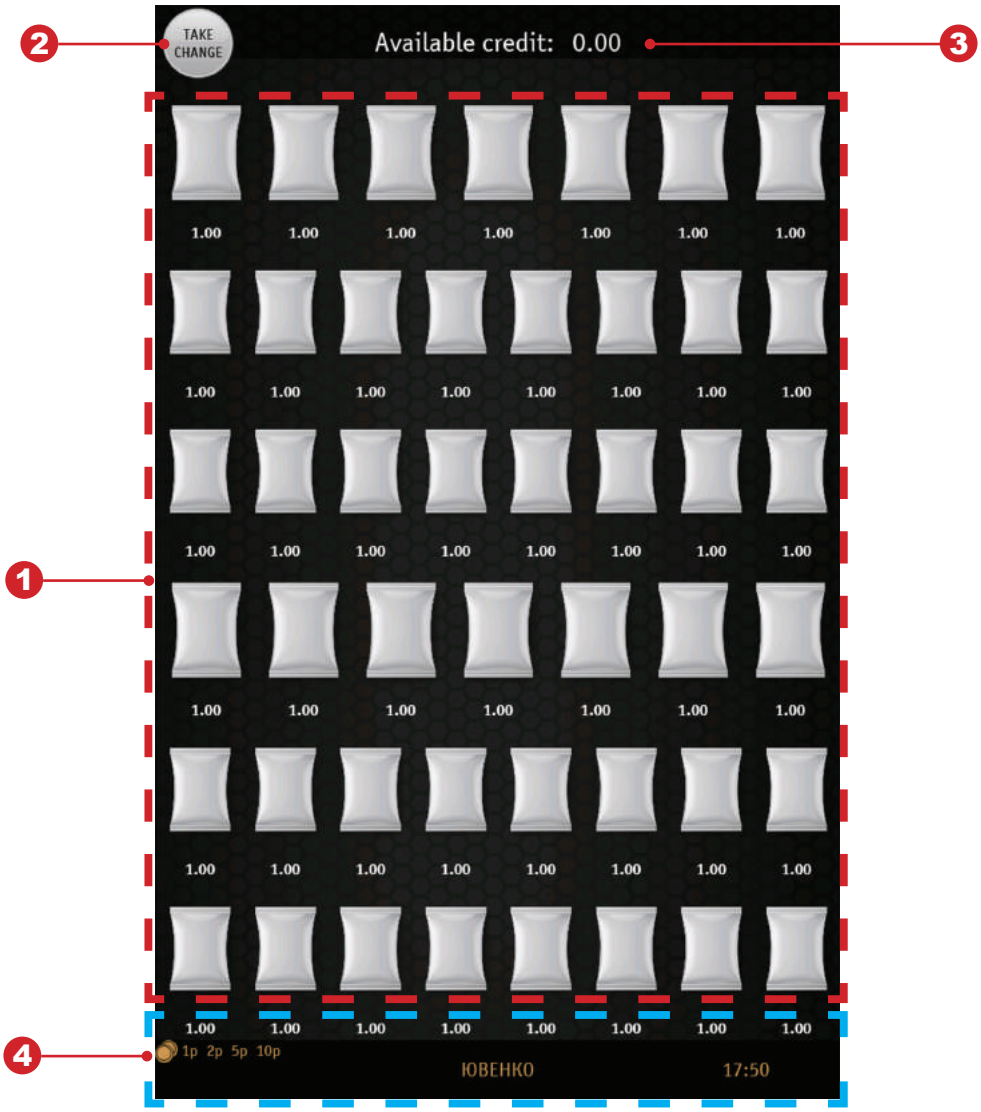

Figure 13

1. Product selection

Here the vending machine planogram (products sold by the vending machine) - product image and price. The screen copies the arrangement of products in cells and on the shelves entirely.

Notice: In the current version of the software there's no interface for importing the images of the products. The import of images is possible by using the update file (see the corresponding section).

2. Button [TAKE CHANGE]

After pressing gives out change to the change tray.

3. Available credit

The amount of entered credit.

4. Information

Here the following information is displayed: par values of bills and coins, used by the vending machine payment systems, welcome line, the vending machine inner clock.

Product selection

To select the desired program, credit the required amount and touch the product image. Then on the touch screen, the window with the selected product image appears (fig. 14).

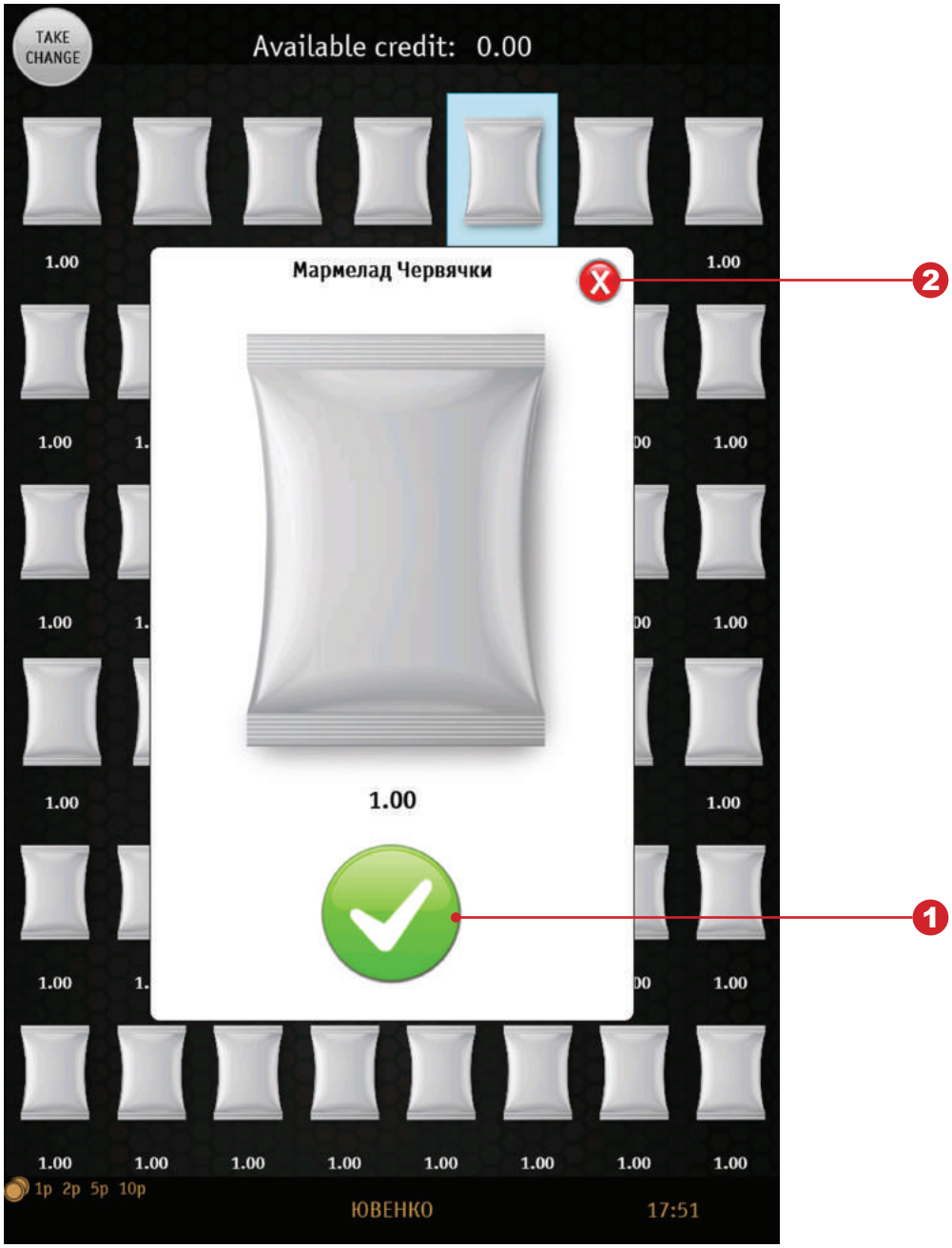

Figure 14 - Product selection

To confirm the selection press the (1) button. Upon that the product will be sold in accordance with the sales algorithm.

To cancel the selection press the (2) button. Upon that the window with the selected product disappears.

9.0 SERVICE MENU - MENU TECHNICIAN

The vending machine servicing is realized in the SERVICE MODE.

Service engineer/technician menu: provides the access to all controller software functionality.

To enter the menu pull out the vending machine control compartment, press and hold till the audible signal sounds the ***Menu technician*** service button (see section 7.2).

If necessary enter the password for accessing the menu.

After navigating to menu technician the vending machine touch screen shows the menu home page (see fig. 15).

To navigate between the menu sections use the navigation touch buttons < left and > right, located at the top of the page with the section name.

To navigate to the required subsection of the menu main section touch the name of the required subsection.

Each menu section and subsection contains its own settings described below.

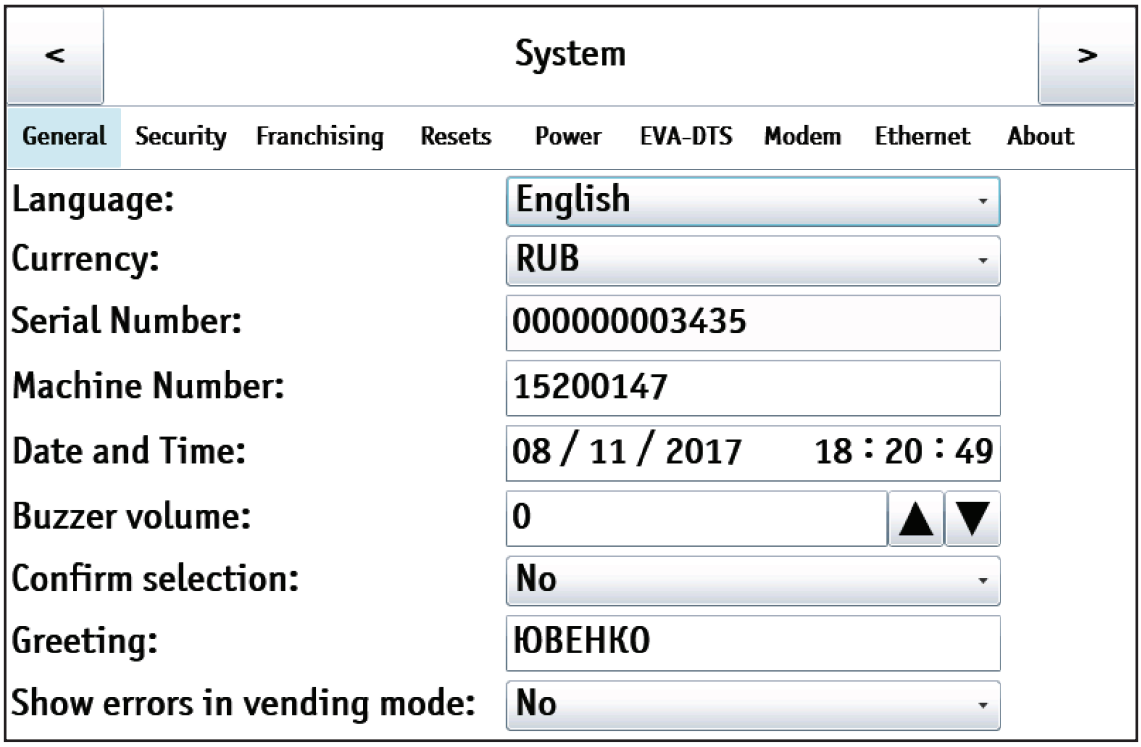

Figure 15 - Homepage

At the bottom of the menu page the following touch buttons are located:

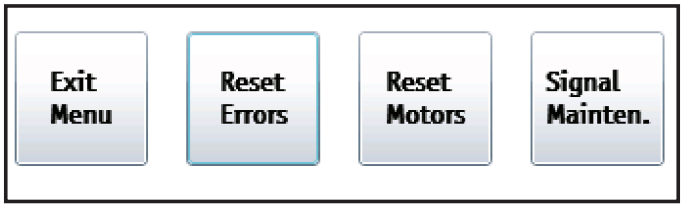

- **Exit Menu** - exit the menu to navigate to the user interface;

- **Reset Errors** - reset the active errors;

- **Reset Motors** - resets all blocked selections;

- **Signal Mainten.** - sending collection data to the telemetry server. Usually, there's no need to use this function because collection data are sent to the server automatically when loading the coin drawer/ removing the cashbox / removing the stacker.

The button is used when the vending machine is operating without payment systems, or if the cashbox/stacker sensors are absent or faulty.

9.1 System

9.1.1 General

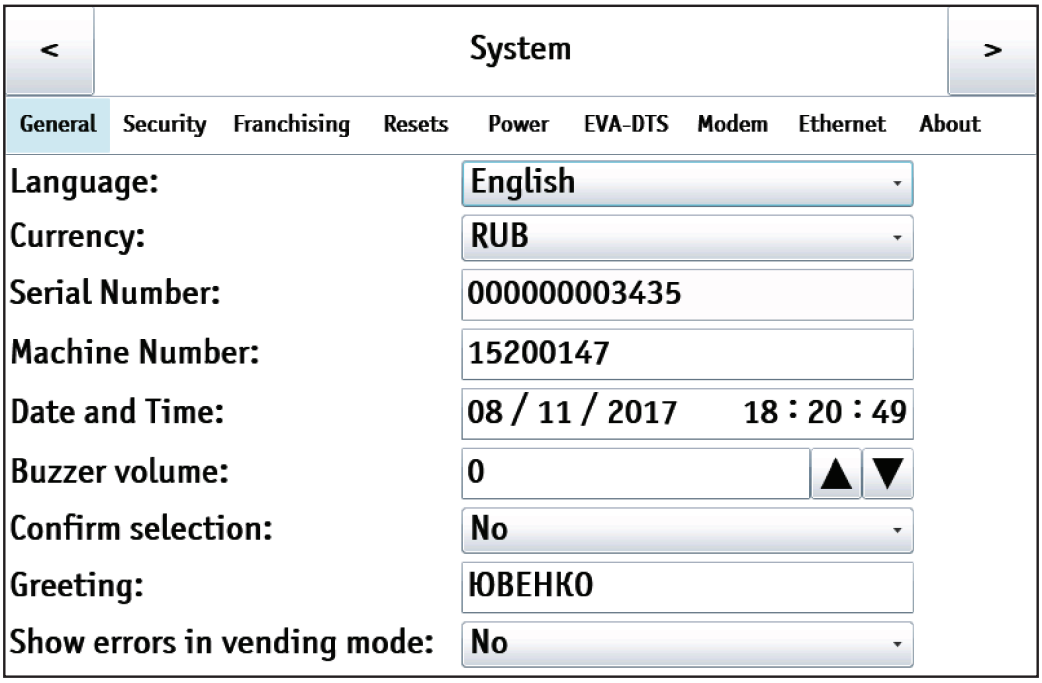

Figure 16 - System [General]

SETTING	DESCRIPTION	VALUE
Language	Selecting the display language of the vending machine interface.	
Currency	Selecting of currency with which the vending machine will operate.	
Serial Number	Shows the controller board (Main Board) serial number. 12-digit number, recorded into the controller board firmware during its manufacturing (it's unique and can't be changed via the vending machine menu).	12-digit number
Machine Number	The arbitrary number for vending machine identification. This number is used for naming configuration and audit files, permitting using this number as the vending machine group number. Setting identical numbers to different vending machines permits creating the configuration files for this group of vending machines in the future	Enter value
Date and Time	Date (dd/mm/yyyy) and time (hh:mm:ss) setting of the vending machine internal clock. Time is displayed in the user menu (see fig. 8.1)	Enter date and time
Buzzer volume	Selection of the vending machine buzzer sound volume, which is activated at the end of selling. 0 - no sound 4 - max. volume	Enter value from 0 to 4
Confirm selection	YES - to choose a drink confirm the choice (see fig. 8.2).	No\Yes
Greeting	Setting the greeting text, which is displayed on the vending machine screen in the sales mode (a message for customers) (see fig.13 and 14).	Enter text
Show errors in vending mode	**YES -** error display with error description in sales mode (customer service). At that the error text is displayed at the bottom of the page, where the greeting is displayed. If there are several errors, they are displayed in turns.	No\Yes

9.1.2 Security

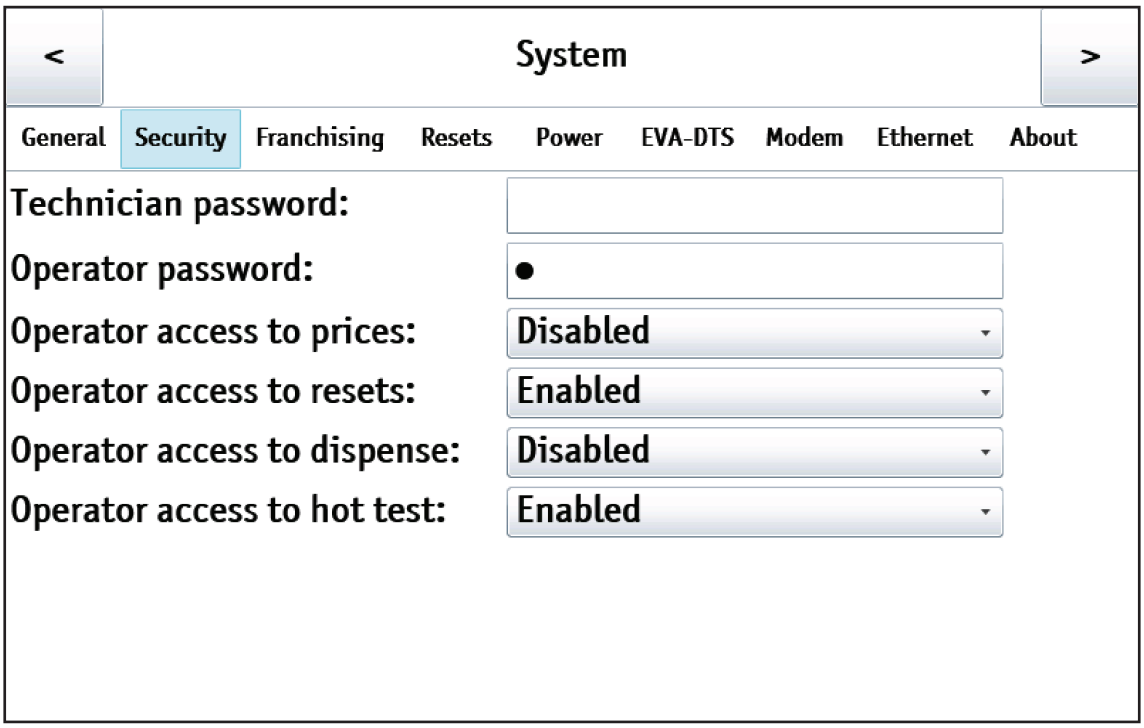

Figure 17 - System [Security]

SETTING	DESCRIPTION	VALUE
Technician password	Entering/editing the password for accessing the menu technician. When entering the password it will be requested when entering the menu technician.	8 digits, 0 ... 9 «0» - not specified
Operator password	Entering/editing the password for accessing the operator menu. When entering the password it will be requested when entering the operator menu.	8 digits, 0 ... 9 «0» - not specified
Operator access to prices	Setting the access rights for vending machine operators from the operator menu for changing the drinks prices. The setting is effective when having payment systems only.	Disabled Enabled
Operator access to resets	Setting the access rights for vending machine operators from the operator menu for resetting the vending machine temporary (resettable) counters.	Disabled Enabled
Operator access to dispense	Setting the access rights for vending machine operators from the operator menu for giving out coins from the operator menu (coins loading). The setting is effective only when having a coin drawer.	Disabled Enabled
Operator access to hot test	The setting of the vending machine operator access rights from the operator menu to the vending machine functional tests.	Disabled Enabled

9.1.3 Franchising

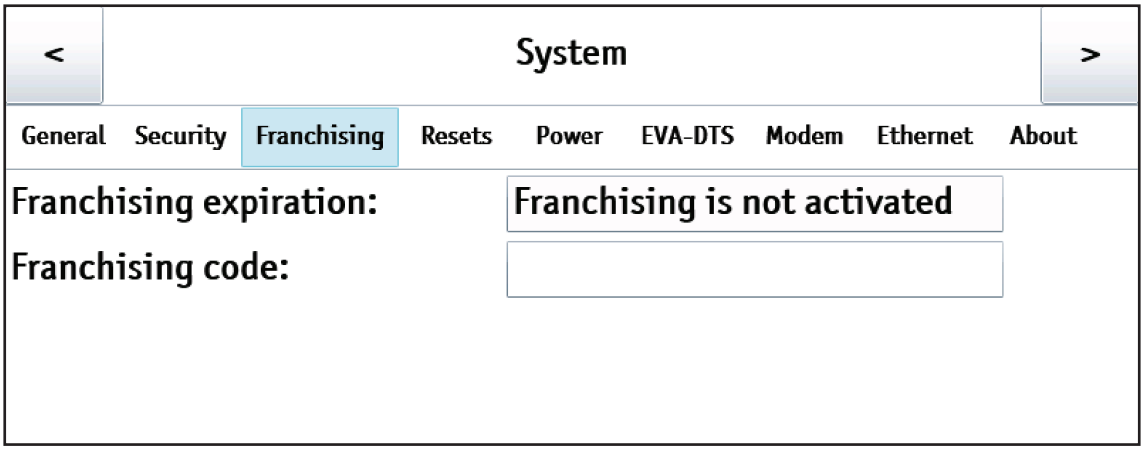

Figure 18 - System [Franchising]

SETTING	DESCRIPTION	VALUE
Franchising expiration	The date, after the expiry of which the vending machine stops operating until the renewal of a lease. The setting is actual only when the franchising code is input.	
Frannchising code	Date entry in the encoded format, up to which the vending machine operation is possible.	16 digits 0...F

9.1.4 Resets

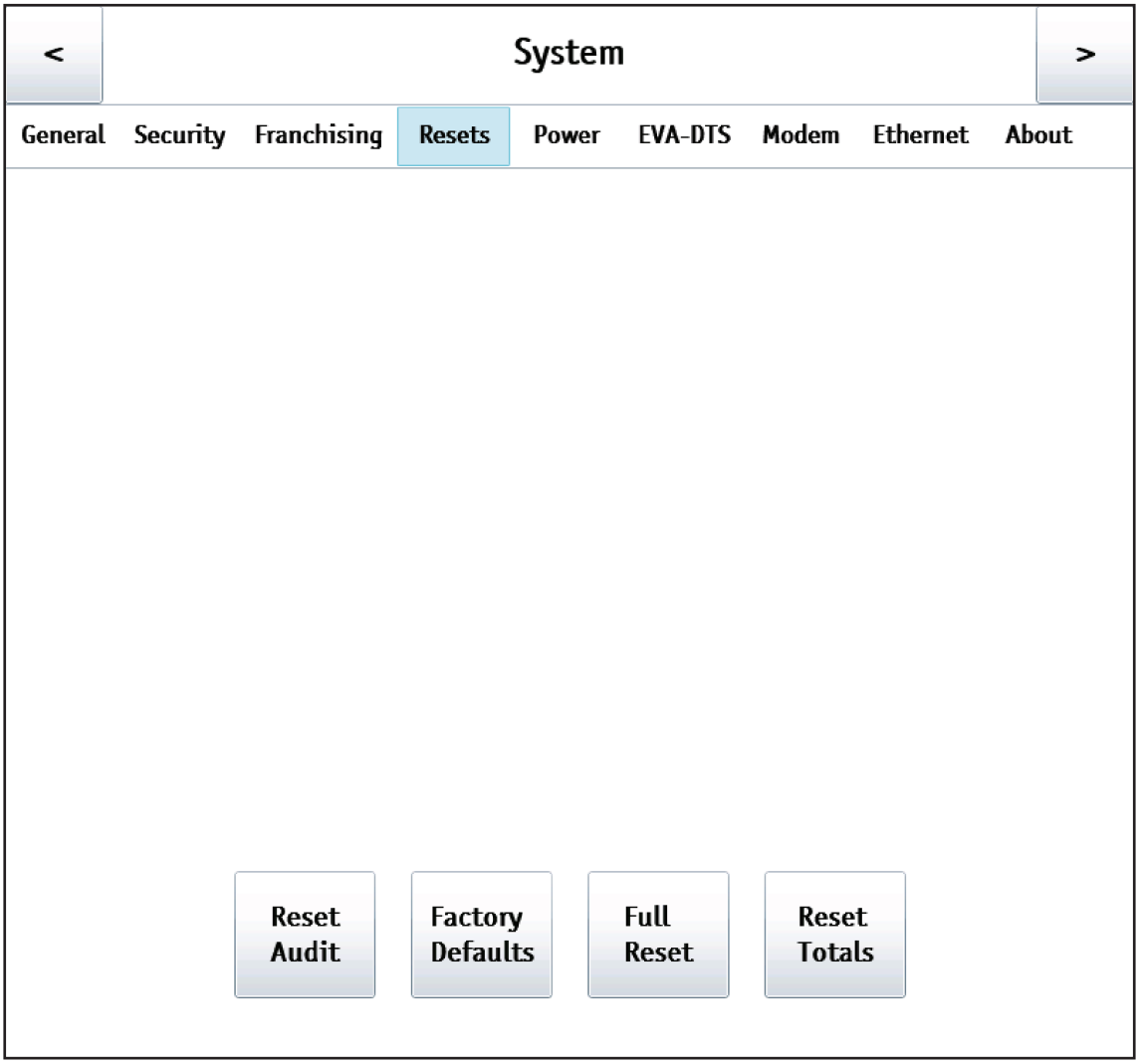

Figure 19 - System [Resets]

BUTTON	DESCRIPTION
Reset Audit	Reset of the audit temporary statistics.
Factory Defaults	Reset of all vending machine settings to factory defaults.
Full Reset	Reset of all vending machine settings and values to factory defaults.
Reset Totals	Reset of all counters, events list clearance.

9.1.5 Power

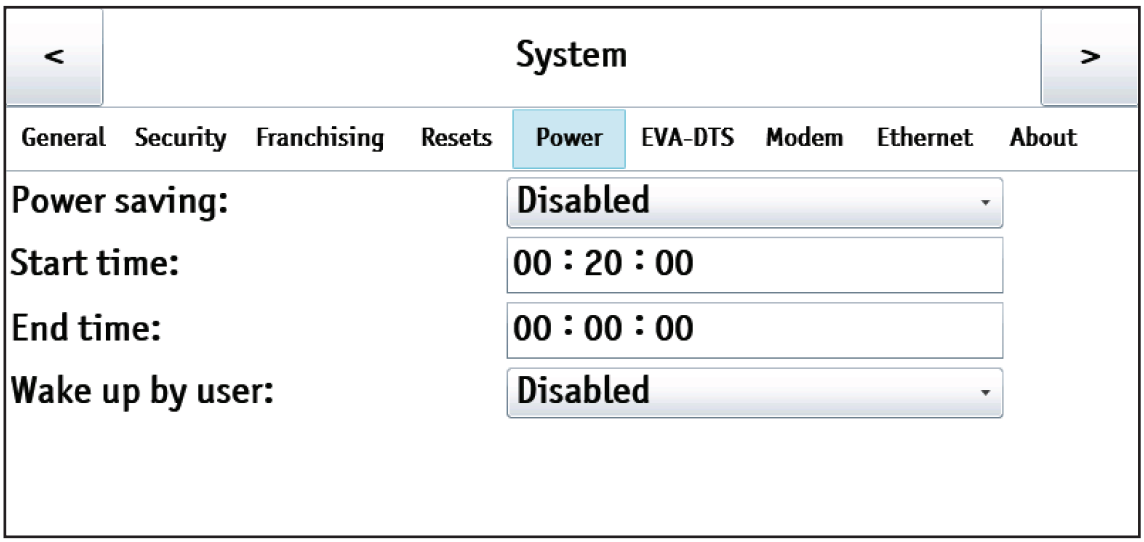

Figure 20 - System [Power]

SETTING	DESCRIPTION	VALUE
Power saving	Energy saving mode activation/deactivation.	Disabled Enabled
Start time	The setting of vending machine automatic switching to energy saving mode. If the [***Start time***] setting value is less than the [***End time***] setting value, e.g. 5:00 and 10:00 respectively, then the energy saving mode is activated between these time settings. If the [***Start time***] setting is larger than the [***End time***] setting (e.g. 10:00 and 5:00), then the energy saving mode is activated from the [***Start time***] setting before 23:59 and from 00:00 up to the [***End time***] setting.	Time input (hh:mm:ss)
End time	The setting of vending machine automatic exiting the energy saving mode.	Time input (hh:mm:ss)
Wake up by user	Indicates can the customer wake up the sleeping vending machine without assistance by touching the vending machine touch screen.	Disabled Enabled

9.1.6 EVA-DTS

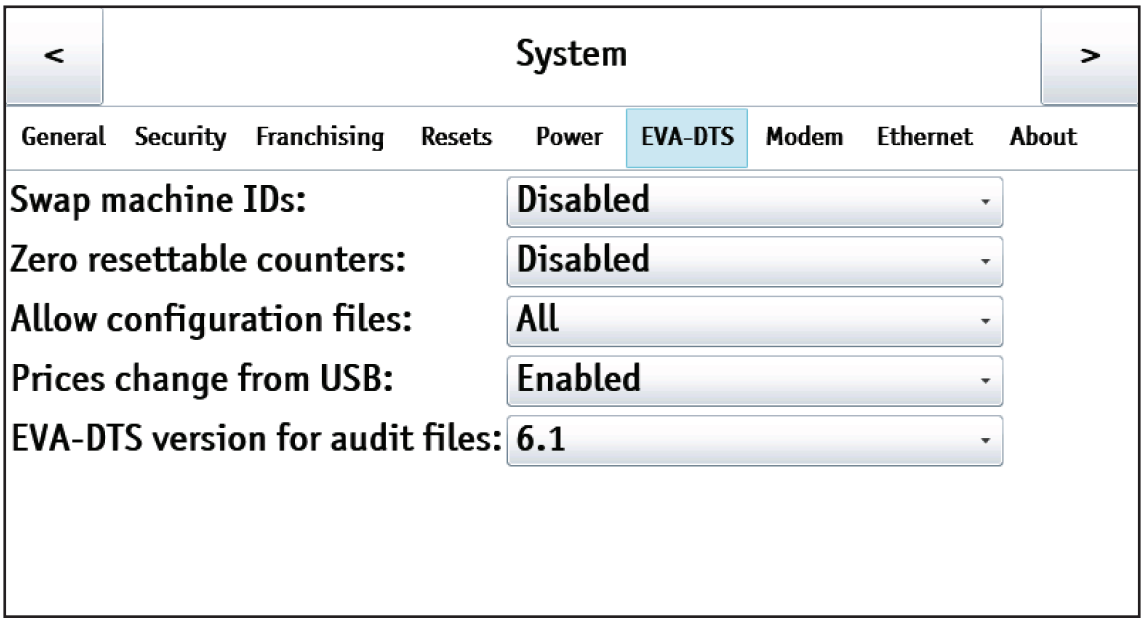

Figure 21 - System [EVA-DTS]

SETTING	DESCRIPTION	VALUE
Swap machine IDs	Permits swapping the fields (the vending machine number is replaced by the Main Board serial number, and the Main Board serial number is replaced by the vending machine number). A vending machine number is a number that is set in the settings and which is possible to change. The Main Board serial number is a 12-digit number, recorded into the controller board firmware during its manufacturing (it's unique and can't be changed via the vending machine menu).	Disabled / Enabled
Zero resettable counters	**ENABLED** - the zeroing of the vending machine resettable counters after the gathering (saving) the log files to the USB-flash drive	Disabled / Enabled
Allow configuration files	**ALL** - permits loading all configuration files **CONF_GEN ONLY** - permits loading only CONF_GEN format from configuration files.	
Price change from USB	Permits/prohibits price changes via loading from a USB-flash drive.	Disabled / Enabled
EVA_DTS version for audit files	EVA-DTS format version selection for audit files.	6.0 6.1

9.1.7 Modem

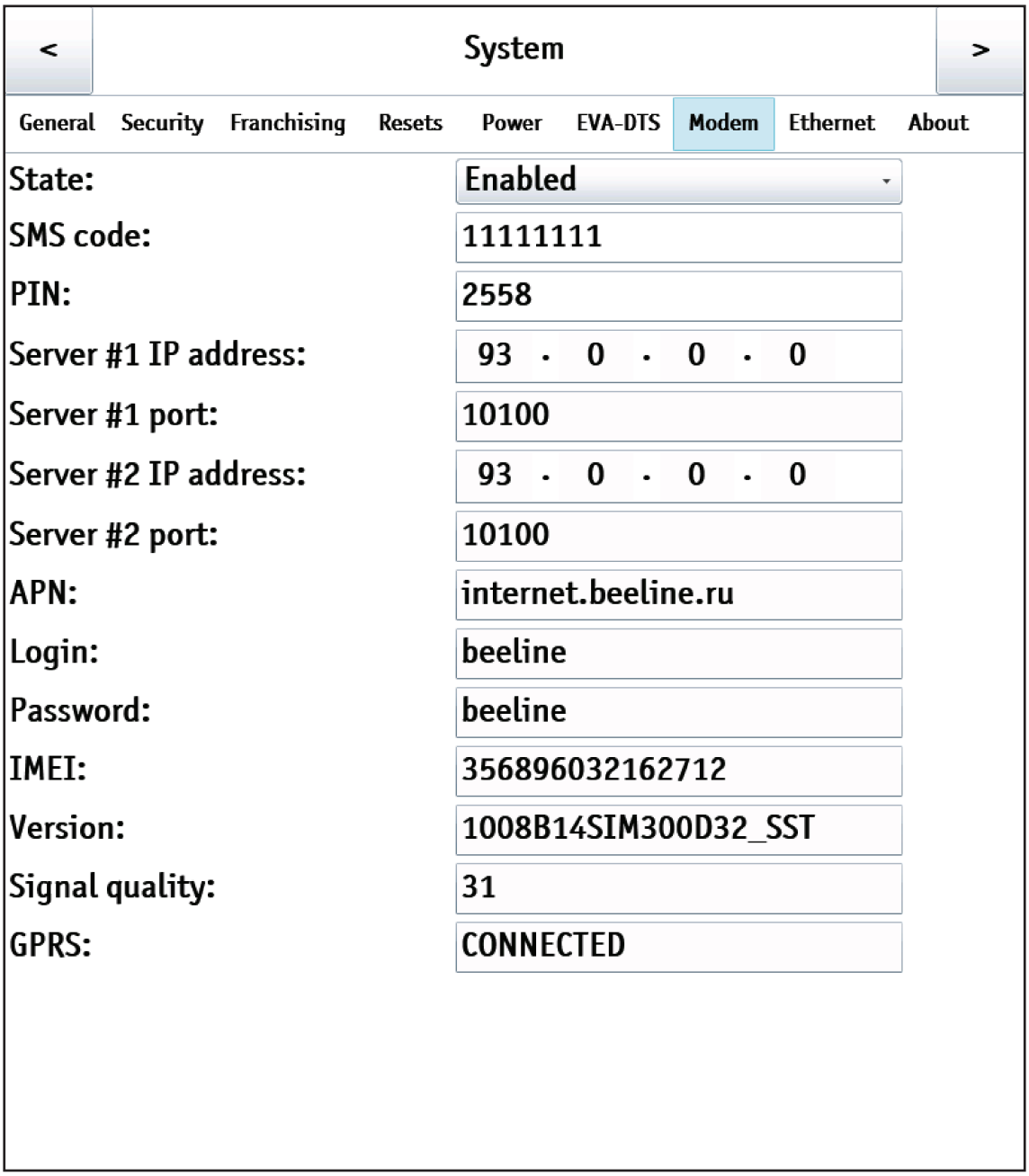

Figure 22 - System [Modem]

SETTING	DESCRIPTION	VALUE
State	**ENABLED** - if the modem is connected.	Disabled / Enabled
SMS code	Sets the 8-digit code, by which the server can make the first connection via SMS (manual connection). When connecting the vending machine manually the server prompts for the access code. The entered access code should match with the code, specified in this setting, otherwise, the connection is not going to be established.	Enter an 8-digit string only (strictly)
PIN	Specifies a PIN-code for accessing the SIM card. This parameter doesn't change a PIN-code of the SIM card. If the SIM card has an activated PIN-code, here you should specify a PIN-code that matches the PIN-code of the SIM card. The use of a PIN-code is not recommended, because in the case of error in a PIN-code this may lead to the SIM card blocking.	Enter an 8-digit string only (strictly)
Server #1 IP address	Specifies the server IP-address, to which the vending machine will connect. At the first manual connection (via SMS) to the server, this parameter is automatically specified by the server.	Enter the IP-address
Server #1 IP port	Specifies the server port, to which the vending machine will connect. At the first manual connection (via SMS) to the server, this parameter is automatically specified by the server.	Enter the port
Server #2 IP address	Specifies the backup server IP-address, to which the vending machine will be connecting in the case when the first address is unavailable. In the absence of the server backup line, the second address should match the first one. At the first manual connection to the server, the parameter is specified automatically.	Enter the IP-address
Server #2 IP port	Specifies the backup server port, to which the vending machine will be connecting in the case when the first port is unavailable. In the absence of the server backup line, the second port should match the first one. At the first manual connection to the server, the parameter is specified automatically.	Enter the port
APN	Specifies the access point, through which the internet connection will be established.	Enter a string up to 40 characters
Login	Specifies login for the access point connection.	Enter a string up to 20 characters
Password	Specifies the password for the access point connection.	Enter a string up to 20 characters
IMEI	Displays IMEI (unique identifier) of the modem installed.	
Version	Displays the modem software version and type.	
Signal quality	Displays the cell signal strength.	
GPRS	Displays whether GPRS is activated or not.	

Note: the settings are actual only when using the modem (which is an option) in the vending machine.

9.1.8 Ethernet

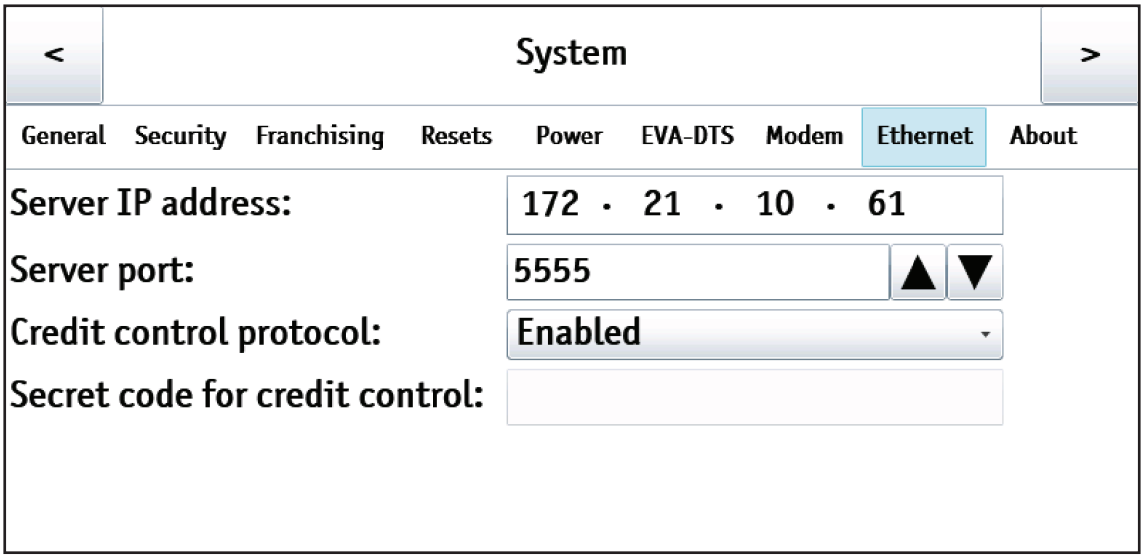

Figure 23 - System [Ethernet]

SETTING	DESCRIPTION	VALUE
Server IP address	Specifies the address of the server that is used by an external card system (if it's permitted), on which the credits of all the cards are stored. If the external card system is not permitted, this setting is meaningless.	4 numbers 0...255
Server port	Specifies the port of the server that is used by an external card system (if it's permitted), on which the credits of all the cards are stored. If the external card system is not permitted, this setting is meaningless.	
Credit control protocol	- **Permits/forbids** the credit control protocol, which may be used for, e.g., the integration of the vending machine to the filling stations POS machine software. - **Enabled** – enables the protocol, permitting accruing the credit/free-giving out the product via Ethernet.	Disabled / Enabled
Credit protocol secret code	Sets a secret key, with the aid of which the software for accruing the credit via Ethernet passes authorization. If in the - Credit control protocol the credit control protocol is permitted, then this setting should match the setting in the filling station POS machine software (if this software accrues the credit rather than controls the sales via a virtual reader). If the protocol in the Credit control protocol setting is forbidden (or this POS software is not using the possibility to accrue the credit), this setting is meaningless.	Code entry

9.1.9 About

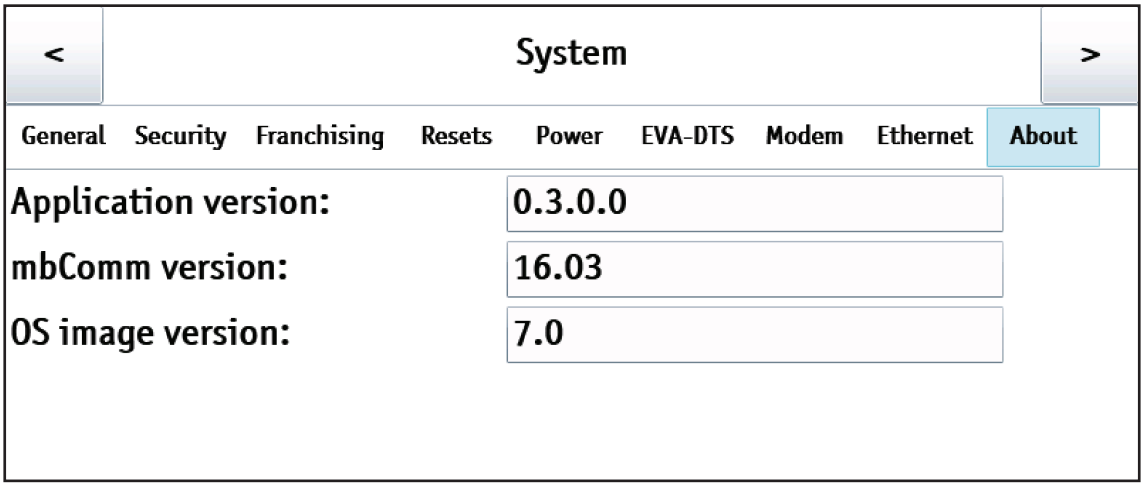

Figure 24 - System [About]

SETTING	DESCRIPTION	VALUE
Application version	The vending machine software version.	
mbComm version	mbComm version (the application component, responsible for communication with the controller board (Main Board).	
OS image version	Version of the installed OS.	

9.2 Snack

9.2.1 Service

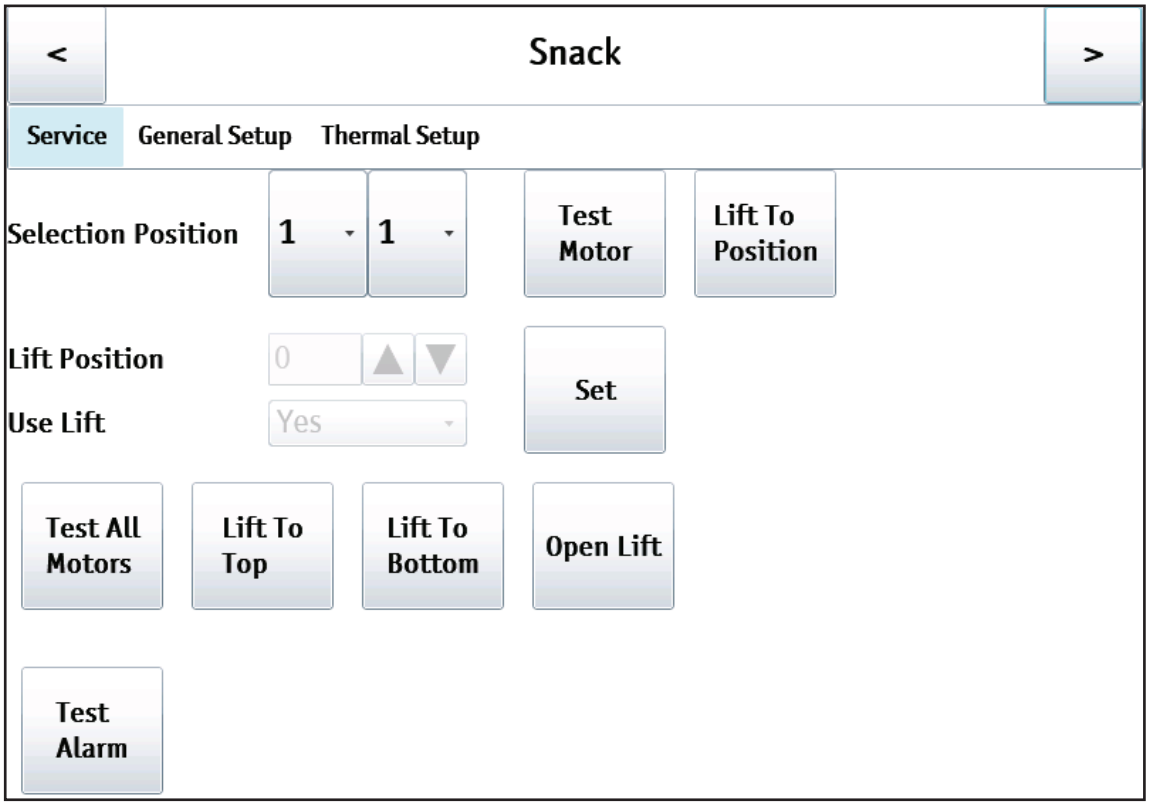

Figure 25 - Snack [Service]

BUTTON	DESCRIPTION
Selection Position	The tested cell number entry.
Lift Position	For the machine FoodBox Lift Touch programmable position of the lift relative to the upper sensor in millimetres ("0" is the top position and the more number, the below will be the lift, the centimetre is specified by value 10). This value is important for all cells for those who are issued with a lift and cells that are issued without a lift. In the first case, the position of lift should be opposite the shelf and the second-the above product (to the falling product does not touch the lift).
Use Lift	If the lift is installed in the machine, this setting must be in the position **Yes**. For machines without the lift - in position **No**.
Set	Set-it is moving of lift in the installed option.
Test Motor	The motor turning in the specified cell.
Test All Motors	Turning all motors (Test all motors).
Lift To Top (for Foodbox Lift Touch only)	Lift movement to the uppermost position.
Lift To Bottom (for Foodbox Lift Touch only)	Lift movement to the lowermost position, when it's still not opening.
Lift To Position (for Foodbox Lift Touch only)	Lift movement to the tested cell.
Open Lift (for Foodbox Lift Touch only)	Lift movement to the home position (when the lift is downwards and fully opened).
Test Alarm	Turns on the siren for some time

9.2.2 Setup

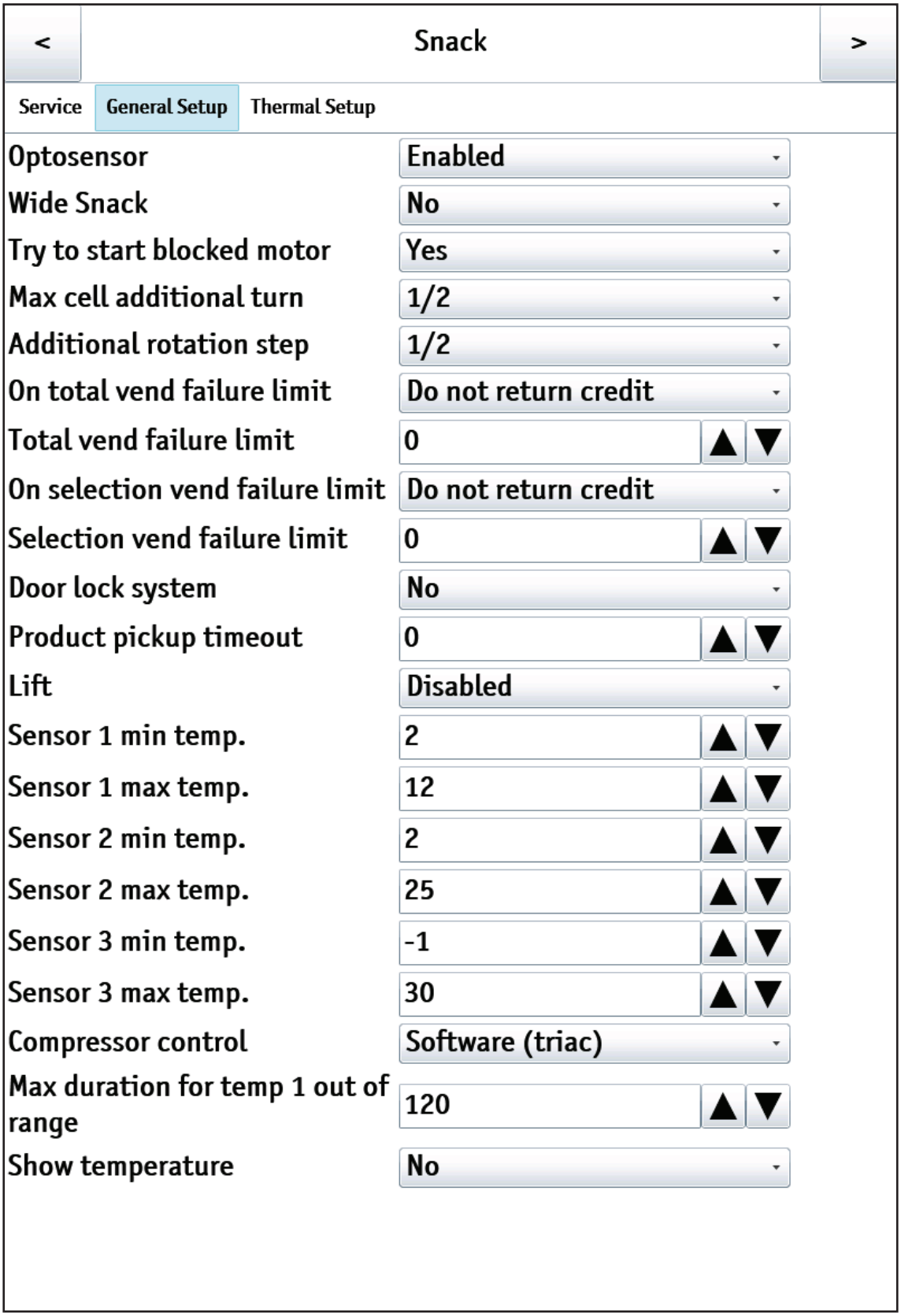

Figure 26 - Snack [Setup]

SETTING	DESCRIPTION	VALUE
Optosensor	Activation/deactivation of photo-sensors, registering the falling product. This parameter should be in the **Disabled** state if the vending machine has no photo-sensors. If the photo-sensors are deactivated the vending machine considers the sale successful each time the motor was able to complete one turn to zero position. If the photo-sensors are activated the vending machine considers the sale successful only if the photo-sensors registered the falling product. With the deactivated photo-sensors, no additional rotation is carried out.	Enabled / Disabled
Wide Snack	This setting selects whether the vending machine is wide (***FOODBOX LONG TOUCH***) or narrow (***FOODBOX TOUCH, FOODBOX LIFT TOUCH***). For wide vending machines, this setting should be in **Yes** position, and for narrow – in **No**.	No / Yes
Try to start blocked motor	Selection of actions for the case when the motor couldn't reach the zero position (e.g., because of the mechanical obstruction). If the **Yes** is selected, the vending machine repeats an attempt to make another turn (after a small delay).	No / Yes
Max cell additional turn	The setting of maximum additional rotation of spiral for the case when the product had never fallen past the photo-sensors after the motor reached the zero position. If the product had never fallen even after the additional rotation of the spiral, then the sale is considered completed with an error. The setting makes no difference for vending machines without any photo sensors installed, sensors, disabled by settings or faulty sensors.	1/2 3/8 1/4 1/8
Additional rotation step	The setting of a pitch for additional rotation of a spiral in the case when the product didn't fall. After each pitch, there will be a small delay, during which the vending machine will wait for the product to fall past its photo-sensors. The additional rotation will end after the total number of additional rotations will reach the value, specified in the **Max cell additional turn** setting. E.g., if in the Max. additional rotation of spiral setting has a set value of 1/2, and in the **Additional rotation step** setting – 1/8, then in the process of giving out the product the vending machine will carry out no more than 4 additional rotations, the size of each additional rotation is 1/8 spiral revolution (1/8+1/8+1/8+1/8 = 4/8 = 1/2). This setting makes no difference if the photo sensors are faulty or disabled.	1/2 1/4 1/8

SETTING	DESCRIPTION	VALUE
On total vend failure limit	The vending machine actions when reaching the number of faults in succession, specified in the **On total vend failure limit** setting. **Machine block (STOP SALES)** - prohibition on sales from all vending machine cells. **Do not return credit** - don't return the written off credit for the faulty product giving out (i.e. if you deposit 5 euro for the product that cost 3 euro and its giving out ended with a fault, then the customer will be given back 2 euro, and 3 euro will be written off).	Machine block (STOP SALES) Do not return credit
Total vend failure limit	The setting of the number of faults at the attempt of giving out products from all vending machine cells, upon reaching which the vending machine respond in accordance with the setting (see above).	
On selection vend failure limit	The setting of the number of faults in succession at the attempt of giving out products from a vending machine cell, upon reaching which the vending machine respond in accordance with the setting: **Machine block (STOP SALES)** - prohibition on sales from the vending machine cell. **Do not return credit** - don't return the written off credit for the faulty product giving out (i.e. if you deposit 5 euro for the product that cost 3 euro and its giving out ended with a fault, then the customer will be given back 2 euro, and 3 euro will be written off).	Machine block (STOP SALES) Do not return credit
Selection vend failure limit	The setting of the number of faults at the attempt of giving out products from a vending machine cell, upon reaching which the vending machine respond in accordance with the setting (see above).	
Door lock system	Specifies whether the product dispensing compartment has an electromagnetic lock.	No Yes
Product pickup timeout	Specifies a time period, during which the vending machine will wait for the product dispensing compartment to be opened after giving out the product (upon the expiration of the time period the lock will be closed even if the compartment wasn't opened).	
Lift	If the vending machine has a lift (Foodbox Lift Touch) this setting should be (**ENABLED**). For the vending machines without a lift, this setting should be (**DISABLED**).	Enabled / Disabled

SETTING	DESCRIPTION	VALUE
Sensor 1...3 min temp. **Sensor 1...3 max temp.**	The setting of the temperature range, going beyond of which is considered an error. When specifying identical values for minimum and maximum temperature the errors of the corresponding sensor are deactivated. The ranges specified in this setting should be min. 2 degrees wider than the cooling unit settings (e.g., if the cooling unit is set to retain the temperature of sensor 1 in the range from 4 to 10, then the control temperature should be specified in the range from 2 to 12 or even wider). These settings have no effect on the cooling unit operation. The range specified for sensor 1, together with the (**Compressor control**) setting (see below), is used for blocking the products, for which the storage temperature conditions are important. To disable such a control one should specify identical minimum and maximum values for the sensor 1. Sensor 1 is a temperature at the bottom of the storage bay (cold zone). Sensor 2 is a temperature at the top of the storage bay for regular vending machines or a temperature of control compartment for FoodBox Street outdoor vending machines. Sensor 3 is an evaporator temperature (an element that cools down the vending machine cabinet). **Sensor 1...3 min temp.** - the setting of minimum temperature for sensors No.1..3 of the vending machine, upon reaching which the record will be saved in the vending machine log. **Sensor 1...3 max temp.** - the setting of maximum temperature for sensors No.1..3 of the vending machine, upon reaching which the record will be saved in the vending machine log.	
Compressor control	This setting selects the type of the cooling unit installed into the vending machine. For the vending machines (with an autonomous cooling unit, not connected to the vending machine electronics) and for the vending machines without a cooling unit select the **Hardware** option. For the FoodBox vending machines with a cooling unit select the **Software (triac)** option. For the FoodBox Street outdoor vending machines (in which, besides the cooling unit, there's a control compartment heater, as well as a temperature sensor 2 that is installed not at the top of the product storage compartment, but in the control compartment) select the **Outdoor** option.	Software (triac) Hardware (danfos) Outdoor
Max duration for temp 1 out of range	Specifies how many hours in succession the sensor 1 temperature should be out of norm (which is defined by **Sensor 1 min temp.** and **Sensor 1 max temp.** settings so that the fresh products storage error is settled down (when the error settles down the products marked as fresh are blocked). This error after it settles can be reset via the menu (telemetry). To cancel this error disable the sensor 1 monitoring in the **Sensor 1 min temp.** and **Sensor 1 max temp.** setting (set identical values for minimum and maximum).	

9.2.3 Thermal setup

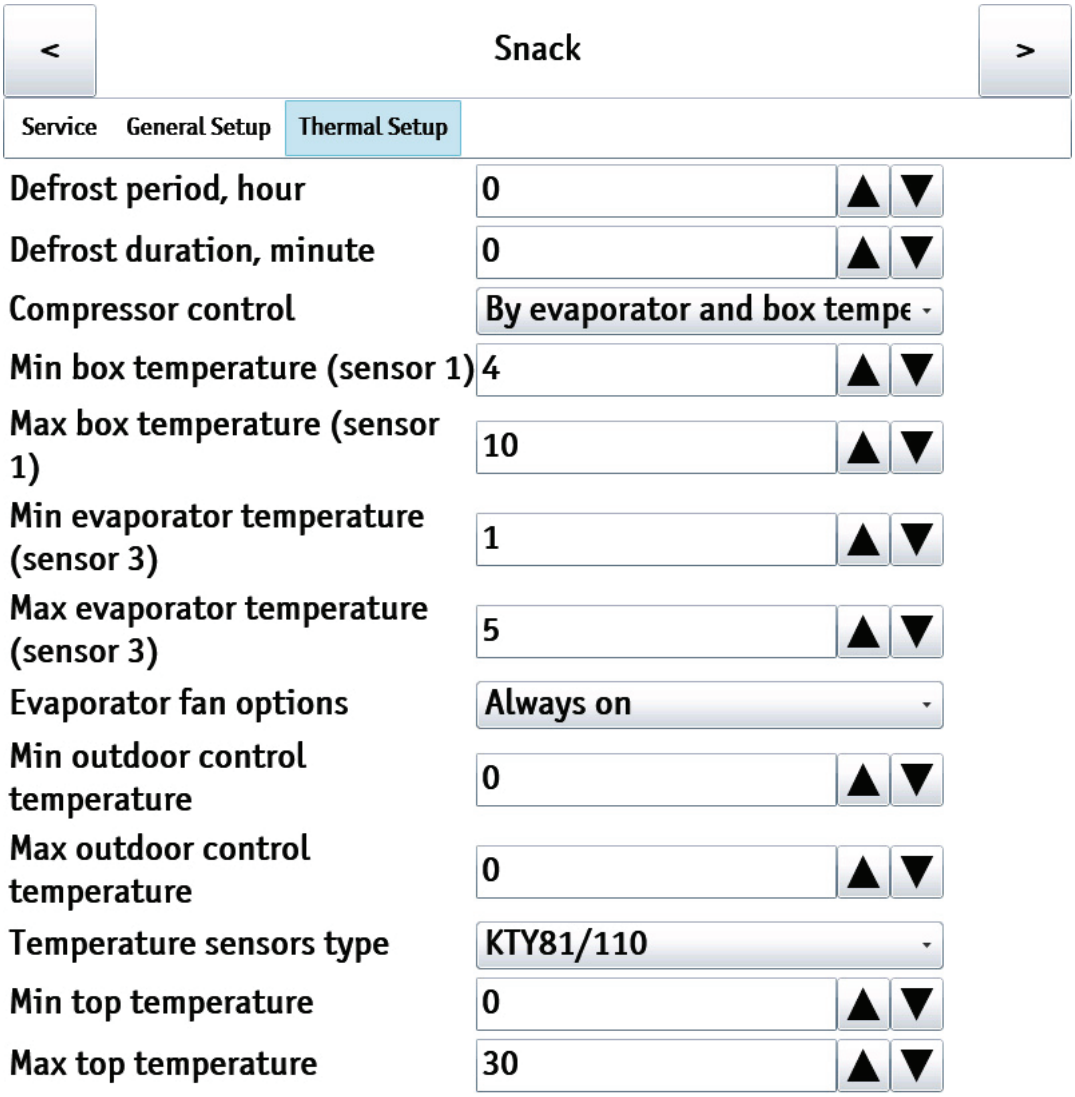

Figure 27 - Thermal setup

SETTING	DESCRIPTION	VALUE
Defrost period, hour	The setting of the cooling unit defrosting period in hours.	0...255
Defrost duration, minute	The setting of the cooling unit defrosting duration in minutes.	0...255
Compressor control	The setting of the vending machine cooling unit compressor control type: **BY EVAPORATOR TEMPERATURE** - the vending machine will try maintaining the evaporator temperature within the range, specified by settings; **BY EVAPORATOR AND BOX TEMPERATURE** (recommended) - the vending machine will try maintaining the temperature at the bottom of the storage bay by using the evaporator temperature sensor readings to monitor the evaporator freezing (to avoid the cooling unit inadequate performance because of the fact that the evaporator is ice coated, which prevents cold pickup from the evaporator heatsink).	By evaporator temperature By evaporator and box temperatures

SETTING	DESCRIPTION	VALUE
Min box temperature (sensor 1), °C	This setting is effective only if the **BY EVAPORATOR AND BOX TEMPERATURE** mode is selected. The setting of the minimum temperature at the bottom of the product storage bay. When this temperature is reached the vending machine stops cooling. After changing this field one should correct the minimum value at the sensor 1 temperature control in the SNACK 1/2 tab, if this control is adjusted (the value in the control should be min. 2 degrees lower than a value in this field).	Input value
Max box temperature (sensor 1), °C	This setting is effective only if the **BY EVAPORATOR AND BOX TEMPERATURE** mode is selected. The setting of the maximum temperature at the bottom of the product storage bay. When this temperature is reached the vending machine starts cooling. After changing this field one should correct the maximum value at the sensor 1 temperature control in the SNACK 1/2 tab, if this control is adjusted (the value in the control should be min. 2 degrees higher than a value in this field).	Input value
Min evaporator temperature (sensor 3), °C	This setting operates differently in different modes. If the **BY EVAPORATOR TEMPERATURE** mode is selected, then this setting specifies the evaporator temperature, by reaching which the vending machine stops cooling. If the **BY EVAPORATOR AND BOX TEMPERATURE** mode is selected, then here the temperature is specified by reaching which the vending machine considers that the evaporator is frosted and activates the anti-frosting cycle (in this mode the temperature is specified that is usually a little bit higher than the gas boiling temperature, i.e. the temperature of minus 6 degrees is specified). After changing this field one should correct the minimum value at the sensor 3 temperature control in the **SNACK** 1/2 tab, if this control is adjusted (the value in the control should be min. 2 degrees lower than a value in this field).	Input value
Max evaporator temperature (sensor 3), °C	This setting operates differently in different modes. If the **BY EVAPORATOR TEMPERATURE** mode is selected, then this setting specifies the evaporator temperature, by reaching which the vending machine starts cooling. If the **BY EVAPORATOR AND BOX TEMPERATURE** mode is selected, then here the temperature is specified by reaching which during the anti-frosting cycle the vending machine stops the cycle earlier (in this mode the temperature is specified at which all the ice on the evaporator is positively melted; the recommended temperature is +10 degrees). After changing this field one should correct the maximum value at the sensor 3 temperature control in the **SNACK** 1/2 tab, if this control is adjusted (the value in the control should be min. 2 degrees higher than a value in this field).	Input value
Evaporator fan options	The selection of the cooling unit fan operating mode: **ALWAYS ON** - the fan is always on; **ON WITH COMPRESSOR ONLY** - operated in the cooling mode only; **ON WITH COMPRESSOR AND DURING DEFROST** - operated when cooling and defrosting.	Always ON ON with compressor only ON with compressor and during defrost

SETTING	DESCRIPTION	VALUE
Min outdoor control temperature, °C	Setting the minimum operating temperature for street performance automata. SET MIN – specifies the temperature, at which the control compartment heating is activated.	Input value
Max outdoor control temperature, °C	Setting the maximum operating temperature for street performance automata. SET MAX – specifies the temperature, at which the control compartment heating is deactivated.	Input value
Temperature sensors type	This setting specifies which sensors are installed in the vending machine. **KTY81/110** - when all (four) sensors are KTY81/110 type; **bottom EKS-211** - when a sensor at the bottom of the chamber and the evaporator sensor are EKS-211, and all other sensors are KTY81/110; **all EKS-211** - when all thermal sensors are EKS-211 type.	KTY81/110 bottom EKS-211 all EKS-211
Min top temperature, °C	The setting operates on vending machines with the temperature control at the top of the cabinet only (with an additional fan and shutter). It specifies the temperature range, which should be at the top of the cabinet. If min.=max., then the temperature control at the top is deactivated.	Input value
Max top temperature, °C		

9.3 Payment Systems

9.3.1 Changer

After choosing this menu item on the vending machine screen the page with the information about the coin drawer is displayed. Here you can view the information about the coin receptacle and conduct manual coin loading and unloading. The information is available when the coin drawer is connected to the vending machine.

The screen layout may differ from the one shown in fig. 28 depending on coin drawer configuration (the number and denomination of coin tubes).

The primary function of this item is in the manual unloading of the coin drawer (standard procedure during the vending machine encashment).

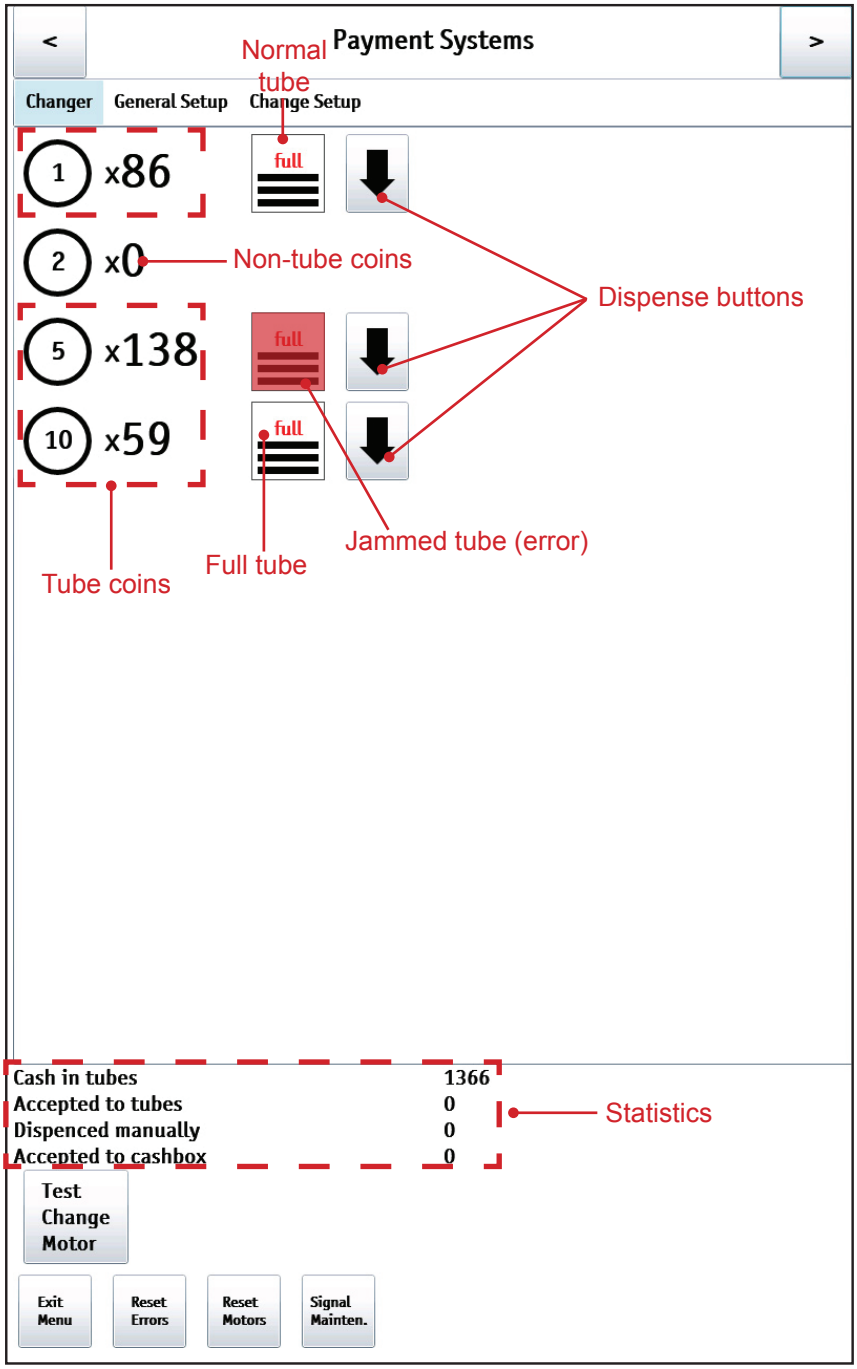

Figure 28 - Changer

Before loading the coin drawer navigate to this menu item. Then conduct loading coins via the coin slot, located at the vending machine door.

In the left lower corner the coin drawer statistic is shown.

Important information you should take into account when loading the coin drawer:

- coins fallen down to the cashbox during loading stay in the vending machine in a form of receipts;
- when using telemetry the removal of cashbox or stacker is prohibited when on this screen;
- when using telemetry all cash (in cashbox or stacker) should be encashed either before or after loading. E.g., it's prohibited to remove the stacker before the cash drawer loading, and to remove the cashbox after the loading.

On the Cash drawer screen next to the tube coins the special tube symbol is displayed. There's no such symbol next to the non-tube coins.

There are 3 conditions of tubes indicated by corresponding icons: normal (not full and not jammed), full and jammed.

<u>Buttons on the Coin drawer screen:</u>

1. Test Change Motor - when pressing this button the change motor test is performed.
2. Exit Menu - exit the menu to navigate to the user interface;
3. Reset Errors - reset the active errors;
4. Signal Mainten - sending collection data to the telemetry server. Usually, there's no need to use this function because collection data are sent to the server automatically when loading the coin receptacle / removing the cashbox / removing the stacker.

The button is used when the vending machine is operating without payment systems, or if the cashbox/stacker sensors are absent or faulty.

9.3.2 General Setup

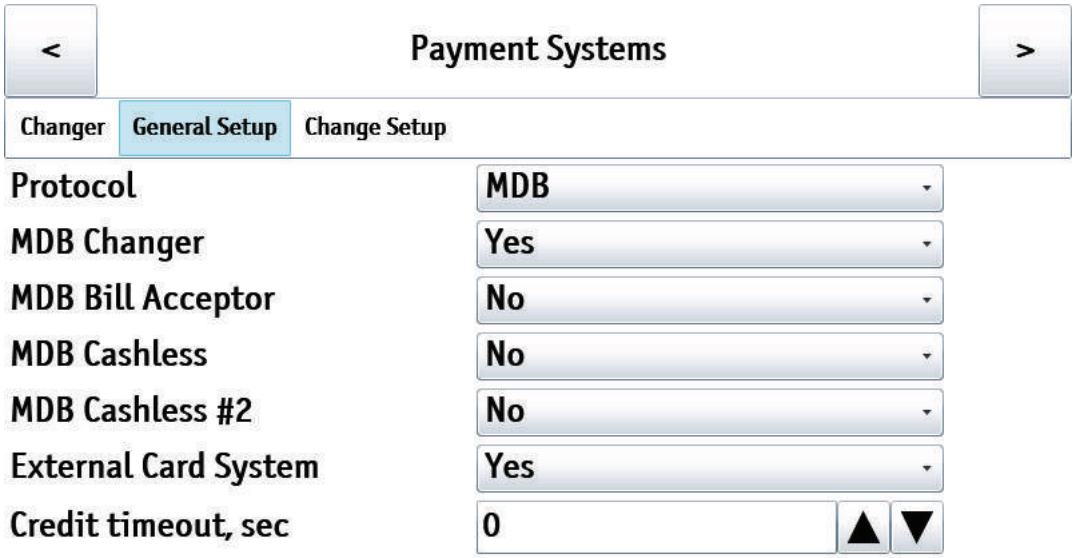

Figure 29 - General Setup

SETTING	DESCRIPTION	VALUE
Protocol	Selecting the protocol for the system of payment	None / MDB / Executive
MDB Changer	Connection / disconnection of the coin acceptor	Yes / No
MDB Bill Acceptor	Connection / disconnection of the Bill Acceptor	Yes / No
MDB Cashless	Connection / disconnection of the Cashless	Yes / No
MDB Cashless #2	Connection / disconnection of the Cashless #2	Yes / No
External Card System	Permit / prohibit the use of an external card system	Yes / No
Credit timeout, sec	Setting the number of seconds, upon the expiration of which the zeroing of the deposited credit occurs	Set (sec)

9.3.3 Change Setup

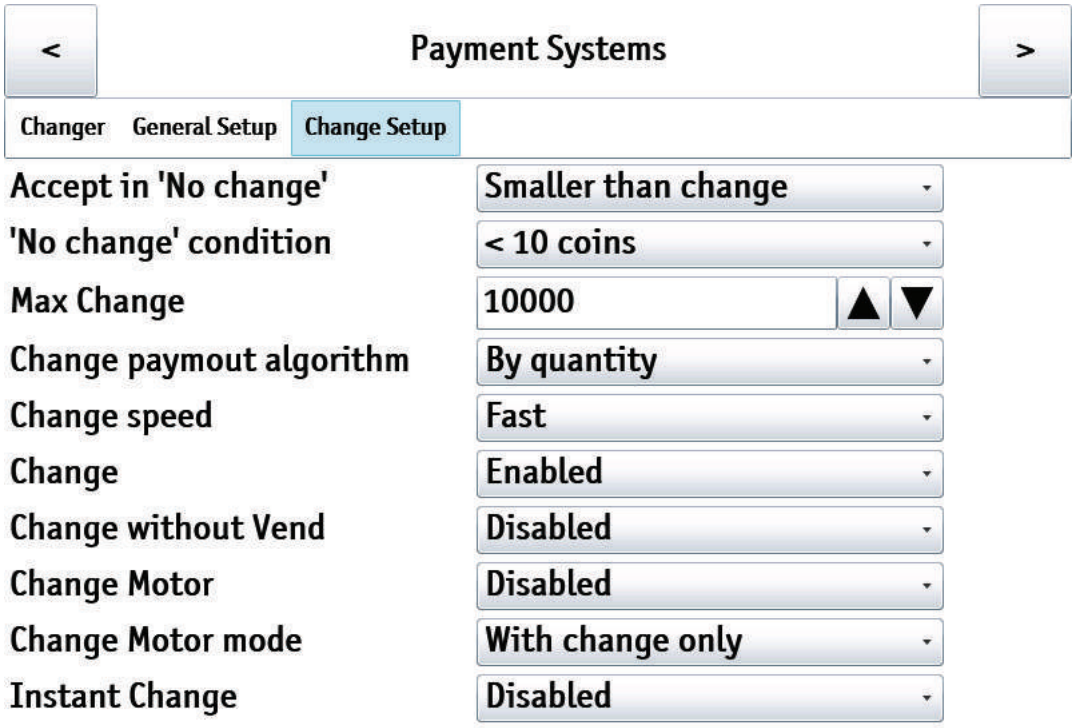

Figure 30 - Change Setup

SETTING	DESCRIPTION	VALUE
Accept in 'No change'	The selection of the vending machine receiving money algorithm upon the occurrence of the NO CHANGE event EVERYTHNING - receiving money without restrictions; TUBES ONLY - receiving coins to empty tubes without errors, as well as bills to the recycler (if it's not overfilled and without errors) - without restrictions. Acceptance to stacker and cashbox of coins/bills, which denomination don't exceed the amount specified in setting 3	Everythning / Tubes only / Smaller than change
'No change' condition	The selection of the requirement of entering the NO CHANGE condition < 10 COINS IN ANY - if at least in one tube there are less than 10 coins; TOTAL < MAX. CHANGE - if it's impossible (not enough cash in tubes and recycler) to give out the maximum change (see setting 3) or if in the minimum denomination tube/recycler there are less than 3 coins/bills;	< 10 coin in any total < max. change
Max Change	Defines the maximum amount of change, given out at a time. The vending machine is not going to give out more change than specified here. 0 - without restrictions In some modes setting 3 impacts the detection of the NO CHANGE condition (see setting 2). This setting is effective in the MDB mode only.	Input value

SETTING	DESCRIPTION	VALUE
Change paymout algorithm	Selection of either change giving out algorithm: **STANDARD** (BY COIN VALUE) - the payment is executed starting from the larger denomination, then downwards. **BY COINS QUANTITY** - when giving out change the vending machine tries to maintain the equal amount of coins in each tube (but the priority is to spend coins from the overfilled tubes first, even if a number of coins in such tubes is less than in the other tubes). This algorithm spends coins in the most optimal way, minimizing the need for loading change when servicing the vending machine (i.e. in the first place the vending machine spends coins that are in quantity in tubes). But in this mode the change may be given out by spending more small denomination coins; **STANDART** (W/DIVISION CHECKING) - is similar to STANDARD (BY COIN VALUE) mode, but before giving out change the vending machine checks the presence of coins in tubes and tries to find a way to give out the full amount if possible. E.g. in the case, described in the standard (acc. to denomination) mode, the vending machine gives out 13 roubles at the expense of giving out only one 5.00 coin and four 2.00 coins; **CHANGER ALGORITHM** - the Alternative Payout change is given out by coin drawer software (only in the case when the coin drawer supports this function). This setting is effective in the MDB mode only.	Standart (by coin value) By coin quantity Standart (w/division checking) Changer algorithm
Change speed	Selection of the change giving out rate: FAST - the vending machine groups coins of same denominations and transmit the coin drawer a command to give out several coins at once (denomination and the number of coins for giving out is specified). This permits the coin drawer to give out coins from several tubes simultaneously. However, in this mode, the risk of error is higher (in the case of coin jammed the vending machine can't determine both the fact of jamming and the number of jammed coins). In this mode, the maximum number of not given out coins is 15 (the coins are grouped no more than by 15). BY COIN (W/CHECK. EACH DISPENCED COIN) - the vending machine instructs the coin drawer to give out each individual coin. In this mode, the change giving out rate is significantly lowered, but the maximum number of not given out coins is 1. This setting is effective in the MDB mode only.	Fast / By coin
Change	Setting change giving out prohibition or permit.	Enabled / Disabled
Change without Vend	Setting change giving out prohibition until the product selection (changing). This setting is effective in the MDB mode only.	Enabled / Disabled
Change Motor	Specifies whether the vending machine change motor is installed or not. For MOVE vending machines this setting is meaningless (in MOVE vending machines the change motor is always installed).	Enabled / Disabled
Change Motor mode	Selecting the change motor actuation mode ALWAYS - every time the CHANGE button is pressed. WITH CHANGE BACK ONLY - the change motor will not turn when pressing the change button, if at the moment the change giving out is prohibited, if there is no need to give out change (no deposited credit) or, if there is no coins to give out change (the coin drawer is empty). The setting is effective in the MDB mode only (in the Executive mode the motor operated whenever the change button is pressed).	Always With change back only
Instant Change	Enabled - Permits giving out change in the process of buying products, reduces the service time. To disable the change giving out in the case of faulty buying, this function should be disabled NO. In the case of giving out the cart (for MOVE vending machines) or combo sale, the change starts to give out in parallel with the giving out of the last product. This setting is effective in the MDB mode only.	Enabled / Disabled

9.4 Errors

In this menu item, the information about errors is available: error names, time and date of recording, number of repeats and actuality.

The actual errors are highlighted in red, not actual - in green.

The most part of errors is cleared after exiting the service menu. Some errors require manual removal and reset. To reset errors press the ***Reset Errors*** at the bottom of the page.

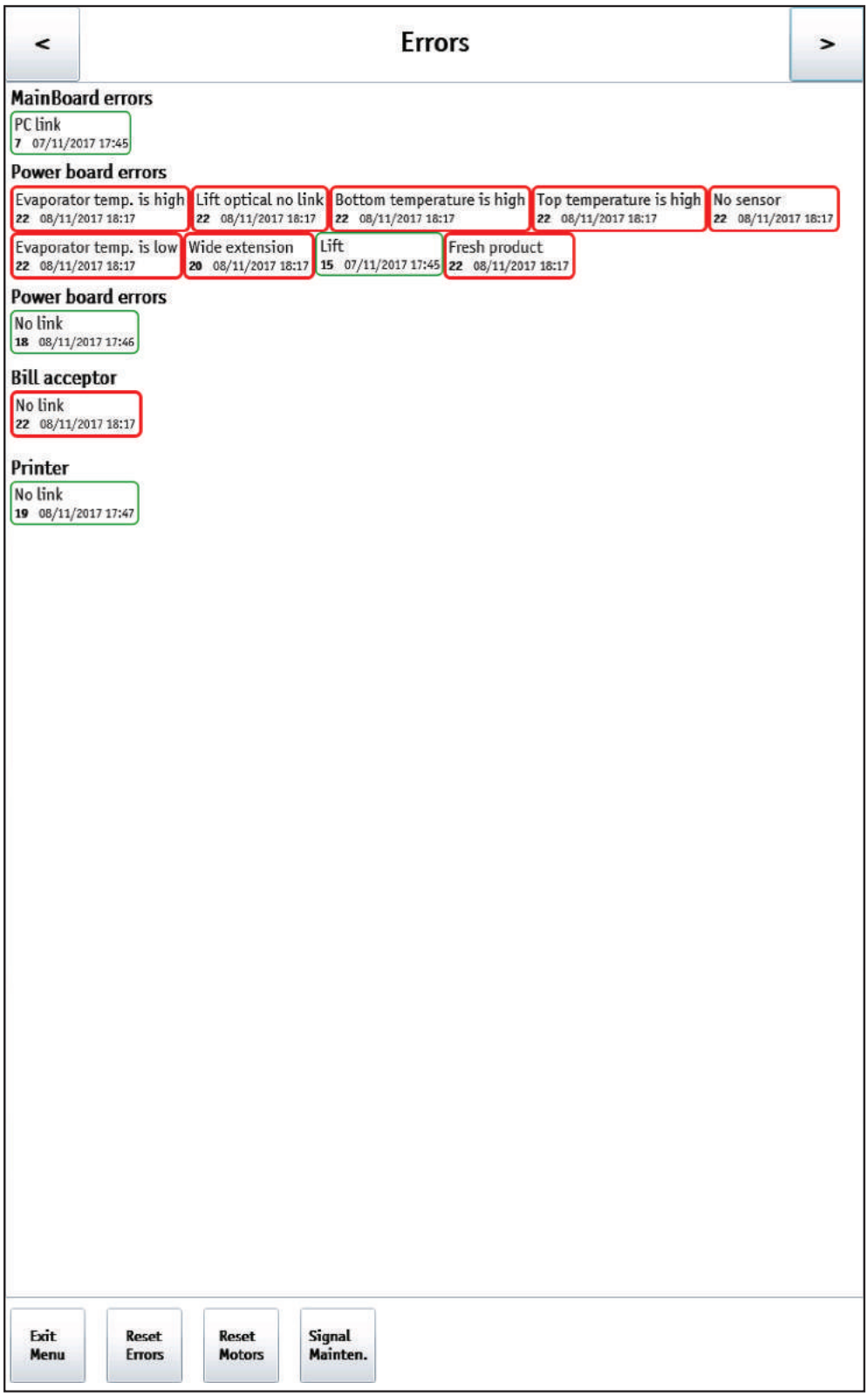

Figure 31 - Errors

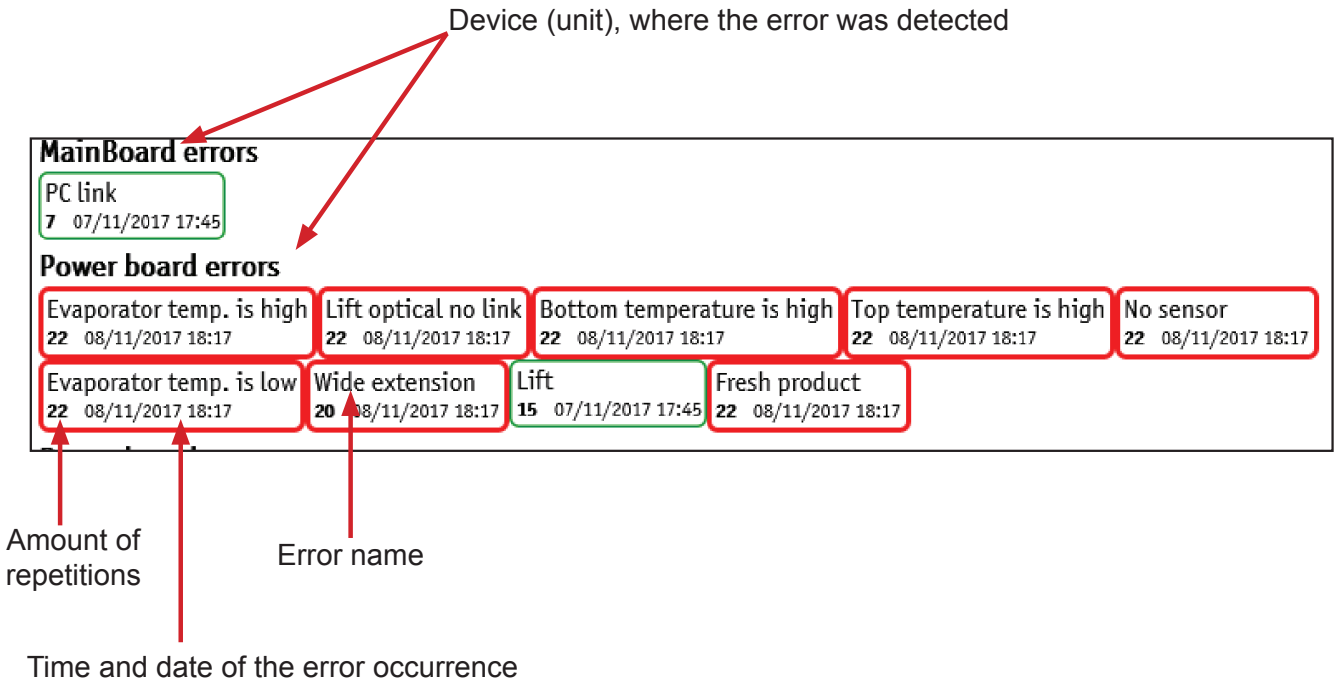
Device (unit), where the error was detected
MainBoard errors
PC link
7 07/11/2017 17:45
Power board errors
Evaporator temp. is high
22 08/11/2017 18:17
Lift optical no link
22 08/11/2017 18:17
Bottom temperature is high
22 08/11/2017 18:17
Top temperature is high
22 08/11/2017 18:17
No sensor
22 08/11/2017 18:17
Evaporator temp. is low
22 08/11/2017 18:17
Wide extension
20 08/11/2017 18:17
Lift
15 07/11/2017 17:45
Fresh product
22 08/11/2017 18:17
Amount of repetitions
Error name
Time and date of the error occurrence

10.0 SERVICE MENU - OPERATOR MENU

The vending machine servicing is realized in the SERVICE MODE.

Operator menu: provides the access to the vending machine functionality during periodic maintenance, such as the event log, information about the equipment operation and access to setting up the information about the drinks.

To enter the menu pull out the vending machine control compartment, press and hold till the audible signal sounds the ***Menu technician*** service button (see section 7.2).

If necessary enter the password for accessing the menu.

The structure of the operator menu is identical to the Menu technician (see above), except for the inaccessibility of the **System** section and **Settings** subsection in the **Snack** section.

11.0 LOADING PRODUCT IMAGES TO VENDING MACHINE

To load the images of products to the vending machine database to be displayed for selecting on the vending machine touch screen:

1. Prepare your own image files in accordance with the following requirements.

The requirements for the product images format:

- PNG format with transparent background;
- resolution 96 dpi, (dots per inch);
- image height 400 pixels.

2. Then on a USB-flash drive, formatted to support the FAT file system, the update file in the form of ZIP-archive. The archive name should start with the “update”. An example of the correct file name is given below: **update_Products-v3.zip.**

The update file should contain the image files for all of your products. An example of the update file for loading the product images to the vending machine:

https://uonline.unicum.ru/ef/tools/FoodboxTouch/FoodboxProductsUpdate.zip

In addition to product images the archive should contain the **description.txt** (update description) file and **script.bin**.

3. Association of images and products is implemented on the **Article ID** (product code) level.

The product code for the selected cell in the vending machine planogram is specified in a special CONFIGURATOR program (the program operating instruction is posted at the web-site: www.unicum.ru).

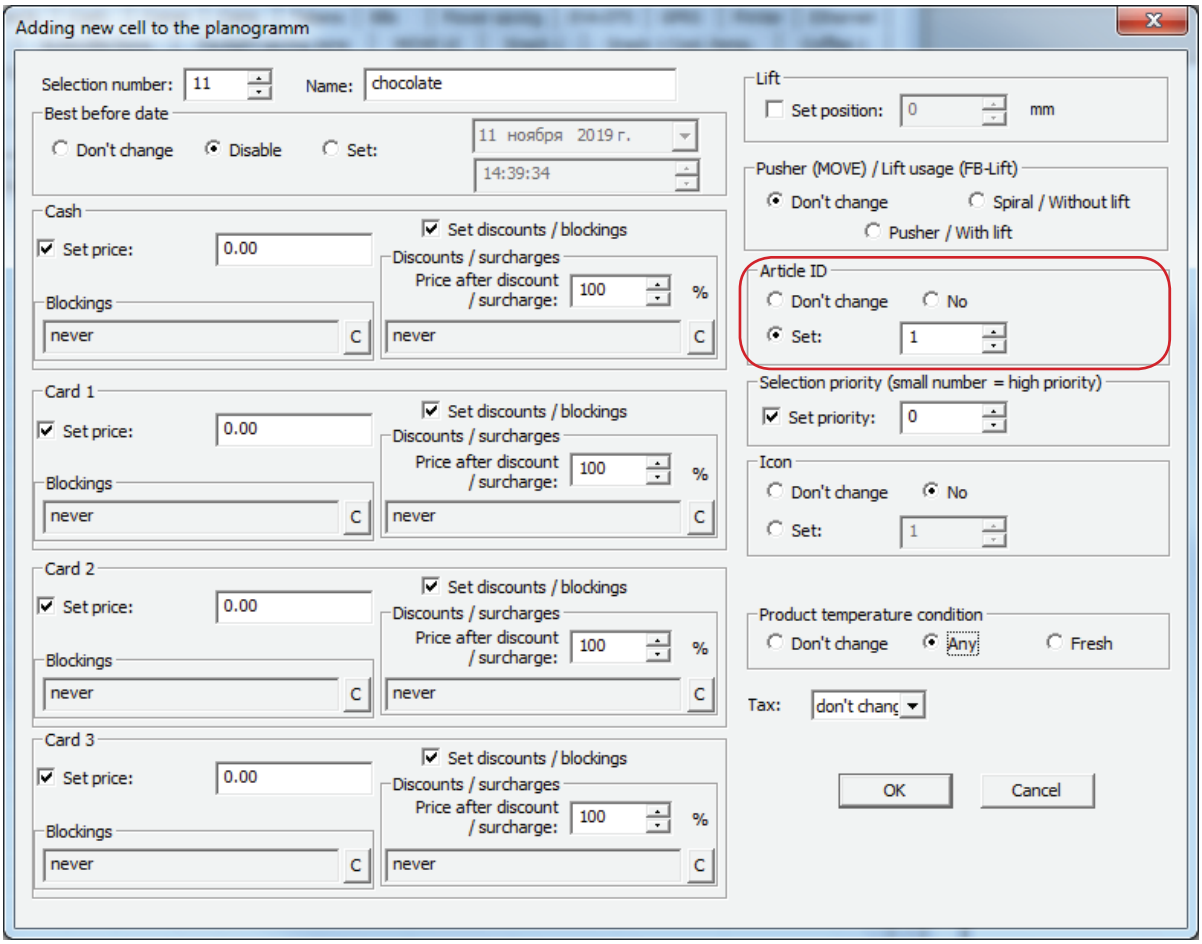

Figure 32 - Configurator [Article ID]

Article ID (product code) is specified in the image file name in the 00000000.png format. i.e. for Article ID = 1 the image file name should be 00000001.png, for ID = 99 - 00000099.png, etc.

4. Load the product image files via the USB-flash drive to the vending machine. To do so connect the USB-flash drive to the USB-PC port (see fig. 2 pos. 2).

12.0 CHANGING THE CONFIGURATION OF SHELVES

All operations described in this section are carried out with the vending machine disconnected from the mains!

Pull out the shelf and free it from any products.

Set the optimal position of spiral ends. For this pull out the spiral in accordance with fig. 33, turn in through 45° or larger angle multiple of 45° and release.

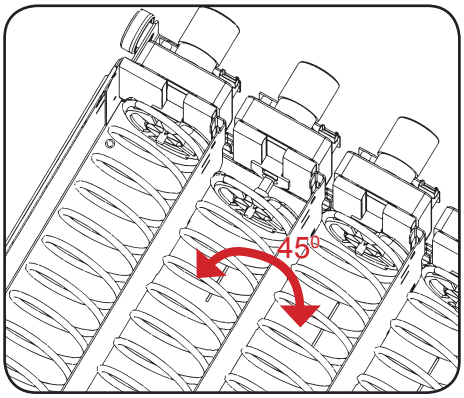

Figure 33

Changing spirals

Disconnect the electric motor power connectors (fig. 34, pos. 1) and pull out the shelf.

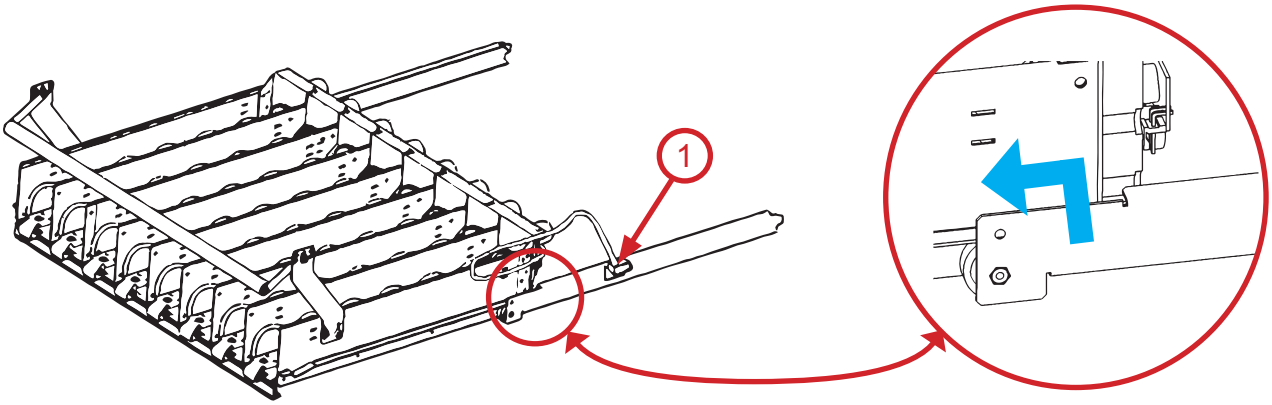

Figure 34

ATTENTION!
To avoid vending machine overturning don't pull out all shelves simultaneously!

If the factory installed spiral is not adequate for selling products, you can select a spiral, corresponding with the product dimensions, and replace the factory installed spiral.

Turn the spiral with left spooling counter-clockwise (in the case of right spooling - clockwise) until the spiral end clicking position and remove the spiral from the holder (fig. 35).

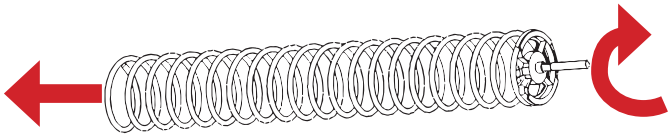

Figure 35

Install the required spiral on the holder (fig. 36) and turn it until the spiral end clicking position. After the spiral replacement put the shelf in place and connect the motors.

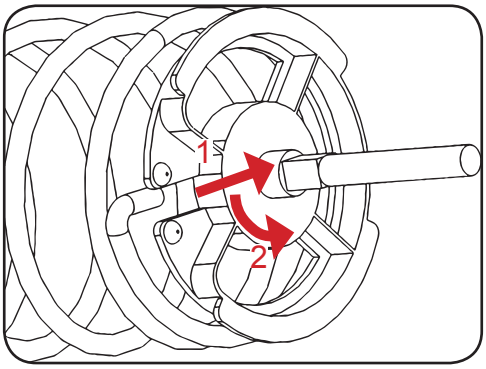

Figure 36

Replacing single cells with double cells

1. Remove the four shelf barriers in the direction shown by arrows in fig. 37.

2. Disconnect the motor connectors (fig. 38) and remove all motors with spirals.

3. Remove any four spirals from the holders (see above).

4. Install the spirals on the motor holders (see above), moreover, use two spirals with different spooling directions but with an identical spooling pitch.

5. Install the motors on the shelf and restore the connections.

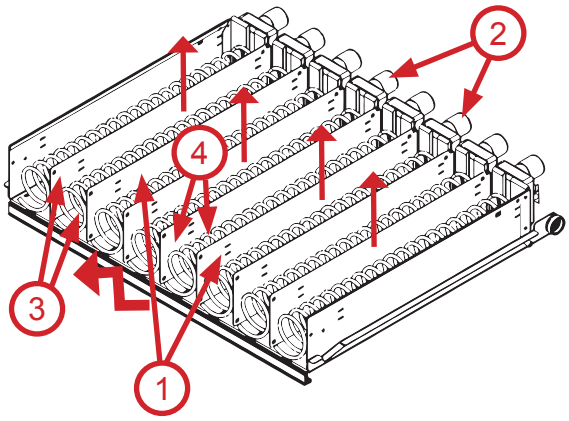

Figure 37 - Shelf with single cells

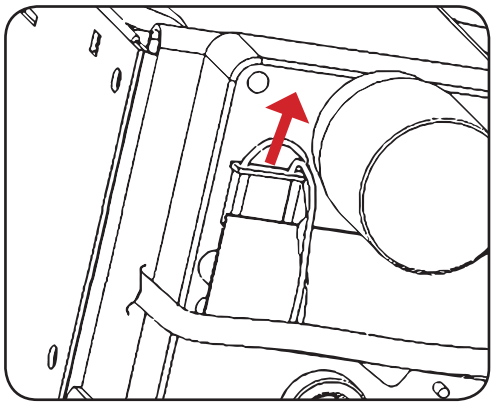

Figure 38 - Motor connector disconnection

After changing the shelf configuration test the motor operation. For this enter the service menu and choose the (**Snack - Service**) menu item. Then touch the **Test Motor** button (select the cell number) - see section 9.

Note: When using high products the use of high barriers is recommended.

Note: when using narrow products the use of additional limiters is recommended (fig. 39).

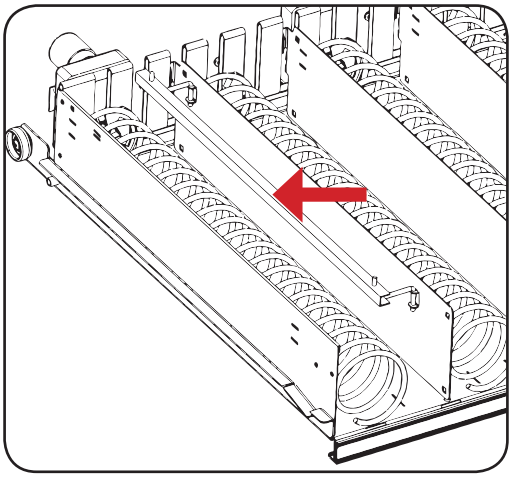

Figure 39 - Limiter

Guides

When using canned of bottled products it's recommended to purchase a set of guides and a set of limiters for bottles, and to carry out the following operations (fig. 40):

1. Install the guide (1) by inserting it into the shelf slot (2) and matching the guide hole (3) with the spiral holder axis.
2. Secure the guide with a tapping screw (4) from the guide set.

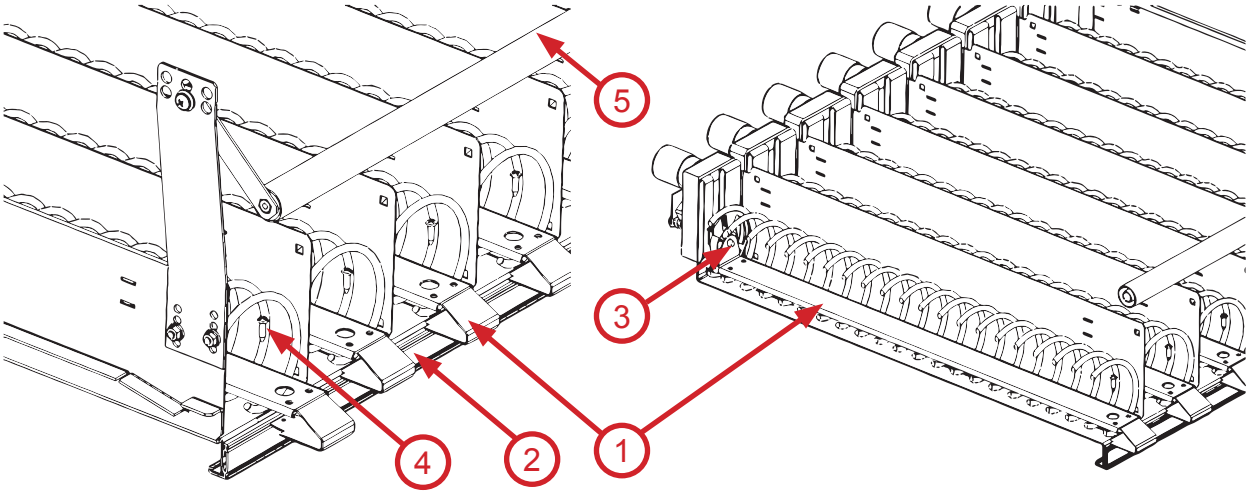

Figure 40 - Guide installation

Note: For high bottles and cans there's an additional mechanism preventing their accidental falling and jamming, located closer to the showcase - bottle limiter (5).

Pusher

To improve the effect of pushing out the product by a turning spiral and to decrease the possibility of its falling the possibility of installing the special pusher (fig. 41) on the front part of the spiral is provided.

Figure 41 - Pusher

Shelf height adjustment

1. Pull out the shelf and free it from any products.
2. Remove the shelf from the vending machine (see the section about replacing the spirals above).
3. Remove a screw (fig. 39, pos.1) from a guide that should be moved.
4. Remove the guide (fig. 42, pos. 2) from the slot (fig. 42, pos. 3).
5. Install the guide to a new position by inserting it into the slot and by fixing the screws (fig. 39, pos. 1).

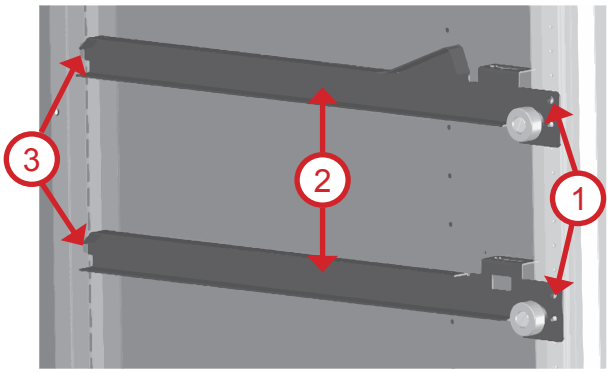

Figure 42 - Shelf guide installation

The vending machine has a 7-th connector for connecting the 7-th shelf motors.

The connector is located under the lower shelf, attached by cable binders on the right wall of the dispensing compartment (fig. 43).

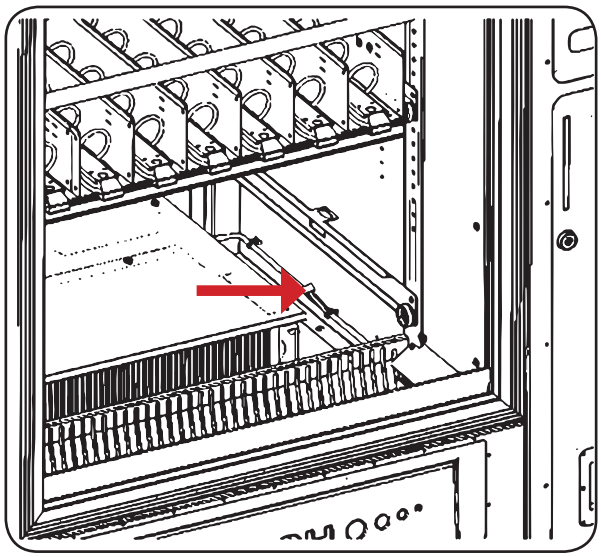

Figure 43 - The 7-th shelf location

To install the 7-th shelf you should order the following:

1 - Shelf set

2 - Ready-assembled guide (right and left).

13.0 MAINTENANCE

Safety measures

When performing maintenance observe safety precautions outlined in previous sections.

Any maintenance operations should be conducted only with vending machine power turned off and the power plug disconnected from the mains socket.

Do not allow any liquids getting into the vending machine!

All maintenance operations should be executed by qualified technicians, trained to properly handle the vending machine and familiarized with safety procedures.

All operations described in this section should be timely performed.

Cleaning of dirt and dust

Cleaning the compartment casings and their doors of dirt and dust should be performed no less frequently than once every six months or when necessary.

1. Clean all exposed areas of the product dispensing tray by using cloth and washing agent.
2. Use the washing agent to clean the door glass from the inside and outside.
3. The cooling unit heatsink and air grills are cleaned by using a vacuum cleaner. Failure to follow this requirement may lead to its breakdown. To access the cooling unit open the vending machine door and by using tools remove the product dispensing tray:

- remove the ventilation cover (see section 5.3).
- remove the lower and upper fastening screws of the dispensing tray (fig. 44).
- disconnect the ground terminal from the pin on the vending machine case (fig. 45).
- remove the dispensing tray from the vending machine.
- the installation is carried out in reversed order.

4. The touch screen is cleaned by using the special wipes for touch screens.

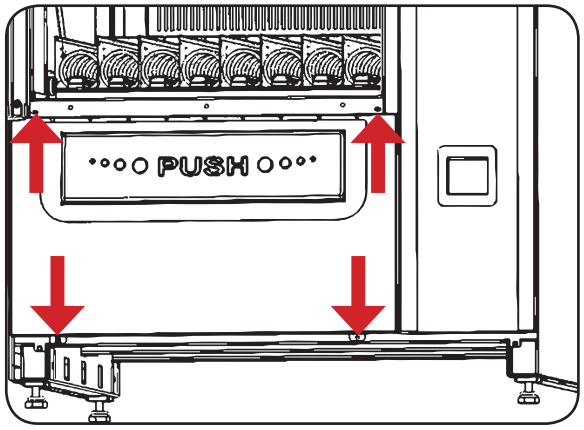

Figure 44 - Product dispensing fastening

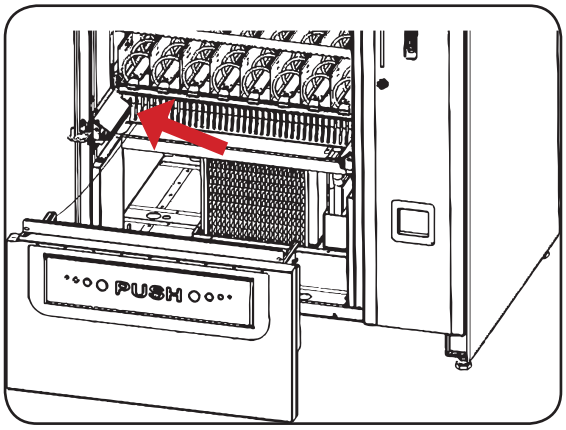

Figure 45 - Ground terminal

ATTENTION!
The use of abrasive materials, solvents, bleaching or chlorine-containing materials is prohibited!