DRINKS VENDING MACHINE

NERO TOUCH FRESH MILK

USER MANUAL

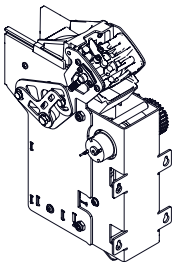

Version 1.0 / July 2021

Document change log

Version	Date	Brief description
1.0	27.07.2021	Document creation

CONTENTS

1.0 GENERAL INFORMATION 6
1.1 Introduction 6
1.2 Terms of use 7
1.3 Configuration options 7
1.4 Manufacturer's warranty 8
2.0 TECHNICAL FEATURES 9
3.0 SAFETY 10
3.1 Main provision 10
3.2 Service key 11
3.3 Temperature 11
4.0 TRANSPORTATION, INSTALLATION, COMMISSIONING 12
4.1 Transportation 12
4.2 Installation 13
4.3 Commissioning 14
4.3.1 Installation fineness of grinding 16
4.3.2 Air fine tuning valve adjustment 17
4.3.3 Connecting the vending machine to water supply mains 22
5.0 THE VENDING MACHINE'S COMPONENTS 24
5.1 Appearance 24
5.2 Internal view (FRESH MILK) 25
5.3 Internal view (without door cover) 26
5.4 Back view 27
5.5 Containers for instants ingredients and coffee beans 28
5.6 Waste container 30
5.7 Autonomous operations kit 30
5.8 Flot chamber, boiler pump, boiler and steam boiler 31
5.9 Espresso group 33
5.10 Mixers for instant ingredients 34
6.0 VENDING MACHINE CONTROL AND MONITORING DEVICES 35
6.1 Main Board (controller) 36
6.2 Quick access keypad 37
6.3 Touch screen 37
7.0 VENDING MACHINE'S WORKING PRINCIPLE 38
7.1 Placement of the cup 38
7.2 Preparation of drinks 39
7.3 Dispensing the drink 39

CONTENTS

8.0 DESCRIPTION USER MENU 40
8.1 Home screen 40
8.1.1 Drink choice 41
8.1.2 The process of making the drink 42
8.1.3 Coffee error 42
9.0 DESCRIPTION SERVICE MENU - MENU TECHNICIAN 43
9.1 Menu technician 43
9.1.1 System 44
9.1.1.1 General 44
9.1.1.2 Security 45
9.1.1.3 Franchising 46
9.1.1.4 Resets 47
9.1.1.5 Power 48
9.1.1.6 EVA-DTS 49
9.1.1.7 Modem 50
9.1.1.8 Ethernet 52
9.1.1.9 UI 53
9.1.1.9.1 Loading video to vending machine 54
9.1.1.10 About 56
9.1.2 Errors 57
9.1.2.1 Setup Errors 58
9.1.3 Planogram 59
9.1.3.1 Planogram settings 60
9.1.3.2 Setting buttons 62
9.1.3.3 Loading image to vending machine 64
9.1.4 Recipes 66
9.1.5 Brewer 68
9.1.6 Sped-up 70
9.1.7 Boilers 72
9.1.8 Cleaning 74
9.1.9 Sensors test 75
9.1.10 Functional Tests 76
9.1.11 Cycle Test 78
9.1.12 Payment Systems 79
9.1.13 Others 80

CONTENTS

9.1.14 Statistics 81
9.1.14.1 Vending machine (VM) 82
9.1.14.2 Current data 83
9.1.14.3 Common audit 85
9.1.14.4 Coins 86
9.1.14.5 Bills 86
9.1.14.6 Errors 86
9.1.14.7 Power boards 87
9.1.14.8 Summary 88
10.0 DESCRIPTION SERVICE MENU - OPERATOR MENU 89
10.1 Operator menu 89
11.0 GENERAL TECHNICAL SERVICING 90
11.1 General requirements 90
11.2 Cleaning list 91
11.2.1 Daily operations 92
11.2.1.1 Espresso group 92
11.2.1.2 Milk system (FRESH MILK) 92
11.2.1.3 Waste containers 95
11.2.1.4 Drop tray and tray grill 95
11.2.1.5 Cup tray 95
11.2.1.6 Milk container (for FRESH MILK only) 95
11.2.2 Daily operations 96
11.2.2.1 Milk flow meter (FRESH MILK) 96
11.2.2.2 Check valve (FRESH MILK) 98
11.2.2.3 Containers for soluble ingredients 98
11.2.2.4 Coffee container 99
11.2.2.5 Mixer 99
11.2.1.6 Cappuccinatore (FRESH MILK) 100
11.3 Ingredients weighing 101
12.0 VENDING MACHINE WASHING 102
13.0 WORKING WITH USB FLASH DRIVE 104

1.0 GENERAL INFORMATION

1.1 Introduction

This user manual (hereinafter called the “Manual”) covers drinks vending machines models: NERO TOUCH FRESH MILK (hereinafter called the “Machine’’).

The manual contains basic information about the Machine and its software. It includes the information,necessary for preparation for use, use and technical servicing of the Machine, as well as basic information about the Machine’s software.

This manual is meant for engineering-technical personnel, who perform technical servicing of vending machines and are qualified to work with similar electronic and electrical equipment.

This Manual is for the technical and engineering personnel, who provide technical servicing for the Machine and are permitted to handle electrical units of similar category.

Breach of the requirements of the current Manual can lead to trauma, device damage and renders the warranty ineffective. You must read and understand the requirements indicated in the current Manual, before installing and using the Machine, because it contains important information regarding unit safety, and servicing and usage instructions.

The knowledge of safety requirements is necessary to instruct the users to properly use the Machine.

The Machine buyer is responsible to make sure that the serving personnel had undergone needed training and was informed properly and that the instructions of the technical documents were fully observed.

The Machine manufacturer carries no responsibility for damage or loss incurred under the following circumstances:

- In case of unsanctioned modernization;
- In case of improper installation;
- In case of improper connection to the power and / or water supply;
- In case of cleaning and servicing contrary to the requirements;
- In case of improper operations or use of Machine’s equipment;
- In case of use of non-genuine spare parts;
- rejection of the use of food products, designed specifically for vending machines;
- use of milk in the FRESH MILK vending machines with a fat content exceeding the range from 2.5 to 3.6 percent.

The manufacturer of the Machine is in no case liable for any possible losses, which might result from interruption of business due to Machine breakdown.

These vending machine should only be used for making and selling drinks!

The numbering of figures in this manual is given in sections.

1.2 Terms of use

This Manual is for a certain version of vending machine software, which is current at the time of printing of this Manual.

All possible modifications, modernizations and/or adaptations, which are effected or will be executed in future for following sales, do not mandate the manufacturer to conduct similar modernization of software for the earlier sold Machines, as well as it does not mandate the manufacturer to amend the user documentation, which is a part of the Machine's package.

The developer of the Machine and regulatory software have the right to make necessary changes to the Machine's structure, software's flow and in the documentation for its use without notice to the user.

1.3 Manufacturer's warranty

The manufacturer's warranty during the warranty period covers all vending machine units and assemblies, except for malfunctions, arising from non-observance of current maintenance documentation requirements by the customer or due to any mechanical failures.

The following components are excluded from the manufacturer's warranty:

- gaskets;
- fuses;
- control boards batteries;
- mixer impellers;
- hydraulic system tubes.

1.4 Vending machine functionality

The vending machine is making various coffee-based drinks with the addition of soluble ingredients, and the coffee beans and foamed milk-based drinks.
The coffee beans based drinks are made using the espresso process.

FRESH MILK

Vending machines NERO TOUCH FRESH MILK can be additionally completed with the equipment, permitting the making of coffee beans based drinks with the addition of fresh milk made foam by using steam and air in the mixing device (cappuccinatore) in accordance with the vending machine settings.

The vending machines with the FRESH MILK option can be additionally (optionally) completed with the fresh milk flow meter, which controls the milk consumption.

For vending machines with the FRESH MILK option, it's recommended to order the milk cooling module (cooler) from the vending machine manufacturer, which is usually installed on the left side of the vending machine.
The vending machine may have other optional equipment (payment module, cup heater, etc.), which is not standard supplied and should be mentioned individually for each order.
When installing the vending machine special pedestals are recommended for use (NERO, NERO TO GO). NERO TO GO pedestals can also be used for connecting the vending machine to payment modules.

The drink can be selected from the touch screen with the context-sensitive display. To select a drink just touch the drink icon with your finger. After the drink selection, the vending machine will operate automatically.

All vending machine functions are controlled by the controller (main board).
The touch screen with the interface is controlled by the internal PC.
The vending machine may use a modem for online data transfer.

2.0 TECHNICAL FEATURES

Table 1

Parameters	NERO TOUCH FRESH MILK
Dimensions (H x W x D), max.	840 x 385 x 495 mm
Weight[1], max.	60 kg
Number of drinks	10 elections
Drink volume	adjusted, max. 300 ml per portion
Electrical supply	~230 V ± 10%, 50 Hz
Power consumption (max.)	3000 W
Water supply	
Water pressure Connection to water supply line Hardness Calcium	0,5 - 8,5 bar (0,05 - 0,85 MPa) G 3/4" 0,9 - 1,0 mgeq/l 18 - 20 mg/l
Container products[2]	
Coffee beans	1,0 kg
Instant coffee	-
Powdered milk / Granulated milk	1,5 / 0,75 kg
Chocolate	1,5 kg
Vanilla	1,0 kg
Ambient temperature	10 - 32 ^{0}C, Relative humidity 80% (without condensation)

1) The weight is indicated for standard equipment, excluding optional equipment.

2) The quantity of ingredients can be different from the one shown depending on the specific weight of the ingredient.

3.0 SAFETY

For safe operation of the vending machine comply with the requirements given in this manual.

3.1 Main provision

- Before putting the vending machine in service always make sure that the operating instructions given in this manual were read and understood.
- Comply with the instructions given in this manual for vending machine transportation, installation, maintenance, and service.
- The vending machine is not intended for operation by persons (including children) with physical, sensory or intellectual limitations or without the proper experience and/or knowledge, if only they are not under the supervision of the person, responsible for their safety, or if only they were trained for the vending machine operation.
- Damaged power cords should be replaced by the manufacturer only.
- Make sure that the vending machine is installed on a stable horizontal surface.
- Make sure that there's no less than 80 mm of free space behind the vending machine for air circulation.
- The vending machine is intended for use in dry premises with ambient air temperature no less than 10 °C.
- The vending machine uses hot water. Don't get too close to the vending machine when making a drink.
- Use only cooled fresh long-storage milk (pasteurized, UHT) with 2.5 - 3.6% fat. The milk should be stored at a temperature from 3.5 to 7°C. For vending machines with FRESH MILK option only.
- For cleaning of the vending machines use only cleaning agents approved for foodstuff.
- Make sure that the vending machine is cleaned daily to avoid hazards for the consumer.
- The vending machine should be serviced by skilled service technicians only.
- The use of the service key is reserved for skilled service technicians only. When the service key is inserted in the vending machine, the safety device is switched off. Caution - the danger of injury!
- The power supply plug should be easily accessible.
- Never insert the plug into an outlet if it's wet or by wet hands.
- Use genuine spare parts only.
- Making changes in the vending machine is prohibited. In such cases, the manufacturer bears no responsibility for any damages!

3.2 Service key

When opening the vending machine door the special breaker automatically de-energizes the vending machine hardware and units. Any operations, carried out with the door open, should be performed by skilled technicians.

The technicians are responsible for the service key safety. Never leave the service key in the vending machine. The service key is intended for use by skilled technicians only.

To apply voltage to the vending machine hardware with the door open insert the service key.

Service key installation

1. Insert the service key into the door trip (see fig. 3a) and turn it through 90 deg. clockwise (see fig. 3b) until fixation.
2. Service key extraction is carried out in the reverse order.

Fig.3a

Fig.3b

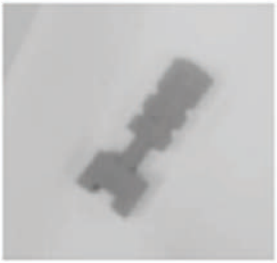

Fig.3c

3.3 Temperature

The vending machine uses a boiler that is filled with hot water. The water temperature exceeds 90°C. The temperature of water in the boiler gradually decreases after the vending machine is turned off.

DANGER OF BURNS!
Avoid contact with hot water.
The danger is especially high at the drink discharge hole.

4.0 TRANSPORTATION, INSTALLATION, COMMISSIONING

4.1 Transportation

Since there's always water in the vending machine water route, drain the water before the transportation, long storage or replacing of the hydraulic system individual units. **Failure to follow these measures can lead to vending machine damages!** Use an original package for the vending machine transportation.

Always drain water before the vending machine transportation or storage at ambient air temperature below 1 °C! Failure to follow this requirement can lead to vending machine breakdown!

Flushing the vending machine's water tract

Stop the water supply to the vending machine. Use the suitable container for draining water. To drain water do the following:

1. Cool down the boiler. For the purpose enter the service menu (menu technician) and select setting **[Functional Tests].** Then press the touch button **[Cool Boiler]**. Start the cooling process by pressing the OK button. After you start the process the machine will pump sufficient amount of water through the boiler to cool it down to 45 degrees. This process can be executed for machines with external water supply as well as for machines with internal water cans.
2. After the boiler has been cooled the machine's display shows the **OK** sign, after which you should-disconnect the machine from water supply or you should remove the water supply pipes from the cans/bottles. It is also necessary to flush water from the pipe, which supplies water from external water supply valve or autonomous water supply pump, to the float chamber. For the purpose remove the pipe from the valve or pump and direct it to the flush bucket. Make sure that all the water from the pipe is discharged.
3. After cooling, flush the boiler. For the purpose enter the service menu (menu technician) and select setting **[Functional Tests]**. Then press the touch button **[Empty Boiler]**. start the flushing process by pressing the OK button. The machine will start pumping out water from the float chamber and the rest of the water tract, which supplies water to the boiler.
4. When the given process will be completed, you will see the OK sign on the touch screen. This is when you should turn the machine OFF.
5. Place a container under the boiler and remove the pipe from the bottom of the boiler by loosening the fixator screw. Then turn the machine ON and wait until all the water would be flushed from the boiler (until the water stops dripping).
6. Turn OFF the vending machine.
7. Reconnect the pipe to the boiler with the help of the tightening screw.

NOTE: when using internal water supply from cans/bottles it is also necessary to flush the autonomous function pump. For the purpose, following the cooling process and removal of supply pipe from the pump, it is necessary to manually pull down the float from the float chamber until the pump starts and hold the float for 5-10 seconds. After this you must reinstall the pipe (to the valve or the pump).

4.2 Installation

ATTENTION! A short circuit caused by water! Mortal danger! Vending machine damage. Never clean the vending machine by watering it from the hose.

Note:

- Make sure that power supply parameters coincide with characteristics, shown on the vending machine nameplate, located on the rear side of the casing.
- The vending machine should be connected to the earthed mains.
- Don't use extension cords for connecting the vending machine to the mains.

General requirements for installation

- Install and operate the vending machine in dry and well-ventilated premises only.
- The vending machine is not intended for use outdoors.
- Before commissioning the vending machine, make sure that the ambient air temperature in the premises, where the vending machine will be operated, is no lower than 10 ^{0}C.
- When choosing the location for the installation make sure the vending machine will be accessible for servicing.
- Make sure that the installation surface is flat and stable, without vibrations.
- Adjust the vending machine level by using the four support feet.
- The vending machine should be installed on the non slip surface.
- The outlet for the vending machine mains connection should be easily accessible so that the vending machine power plug could be rapidly disconnected.
- The ambient air temperature for the vending machine normal operation should be from 10 to 35 ^{0}C.
- Make sure that the vending machine rear wall is no less than 80 mm away from the wall.
- •Open the vending machine door and visually check the hydraulic circuit tubes and threaded connections (see Appendix A). In the case of the hydraulic circuit tube defect or loose connection is detected the further vending machine use is possible only after the malfunction repair.

Note:

Make sure there's enough free space in front of the vending machine for fully opening its door.

Installation conditions: Intervals (recommended)

- The side distance from the objects on the left and right of the vending machine should be no less than 50 mm (with the exception of the milk cooling module).
- The distance from the vending machine rear wall should be no less than 80 mm.
- The distance from the floor to the vending machine should be no less than 800 mm.

Installation conditions: Water

- Make sure that the vending machine is connected to the cold potable water line (in the case of external water supply)!
- The water line pressure should be from 0.5 to 8.5 bar (0.05 - 0.85 MPa). Pressure exceeding or lowering is not permitted. If the line pressure is too low or too high, the vending machine will not operate properly.
- Water temperature at the vending machine inlet should be from 5 to 35 ^{0}C.
- The water should satisfy all potable water norms.
- Don't bend over the water connecting line.

Installation conditions: Mains voltage

- Admissible mains voltage: ~230 V ± 10% 50 Hz

Fig.4.1

Vending machine unpacking

Get the vending machine from the package, and remove all packaging. Because the vending machine should be transported only in the original package, it's recommended to save the packaging. The packaging should be recycled in accordance with current environmental legislation.

4.3 Commissioning

Note:

Only skilled technicians can install and put the vending machine in service. Before installing and putting the vending machine in service read and understand the instructions given in this manual.

After removing the vending machine from the packaging:

1. open the vending machine door by using the key (the key is secured by a tie to the cup shelf or the cup arrester, see fig. 5.1).
2. remove the vending machine components, included in the scope of supply, from the waste containers, located in the lower part of the vending machine, (see fig. 4.2).

Fig.4.2

1 - Baffle plate;
2 - Power cable;
3 - Passport vending machine;
4 - Coffee bean container;
5 - Silicone tube with terminal (nozzle);
6 - Service key;
7 - Set of extra (spare) fuses;
8 - Hoffmann clamp (FRESH MILK).

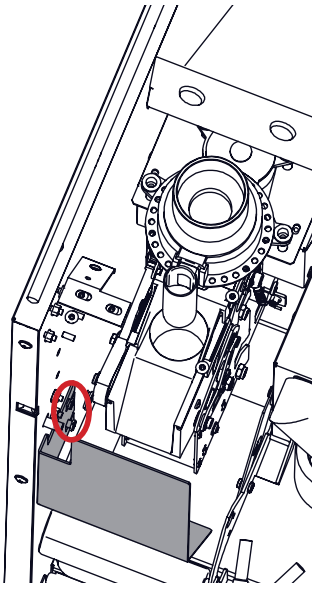

Fig.4.3

4. To install the baffle plate, hang it on the bolt (see fig.4.2, pos.1), which is situated on the left inside wall of the vending machine's body under the espresso group.

3. Connect the vending machine to the external or internal water supply in accordance with the manual. Close the vending machine door.

4. Connect the vending machine to the grounded mains. The mains technical characteristics are shown on the vending machine nameplate.

5. Switch on the vending machine by turning the switch on the switching unit (see fig. 5.4, pos.2) to the (I) position.

The components and parts, included in the machine's package are packed in the waste containers, inside the machine (see fig.4.2).

4.3.1 Installation fineness of grinding

Adjusting the grinder

The quality of grinding is adjusted with the regulating screw.
The regulating screw is situated on the grinder frame (see pic. below).

Put the S5 hex wrench from the supply kit. Move clockwise to decrease grind (smaller particles), contr-clockwise to increase (larger particles).

Adjust the grinding of the grinder according to the working needs. Testify the coffee quality and repeat the process until the successful result.

NOTE: the finer the grind, the longer it will take to brew and the richer the taste of the drink.

Fine adjustment of the grind can be reached by the following actions: changing the regulating screw position and tasting the drink.
Mind that the changes in adjustment are not felt instantly, but take place after three circles of preparation. (Change the regulating screw position, two circles of preparation must be dropped into the trash can, third tasted.)

The factory settings: fully twisted out regulating screw screwed one full turn clockwise.

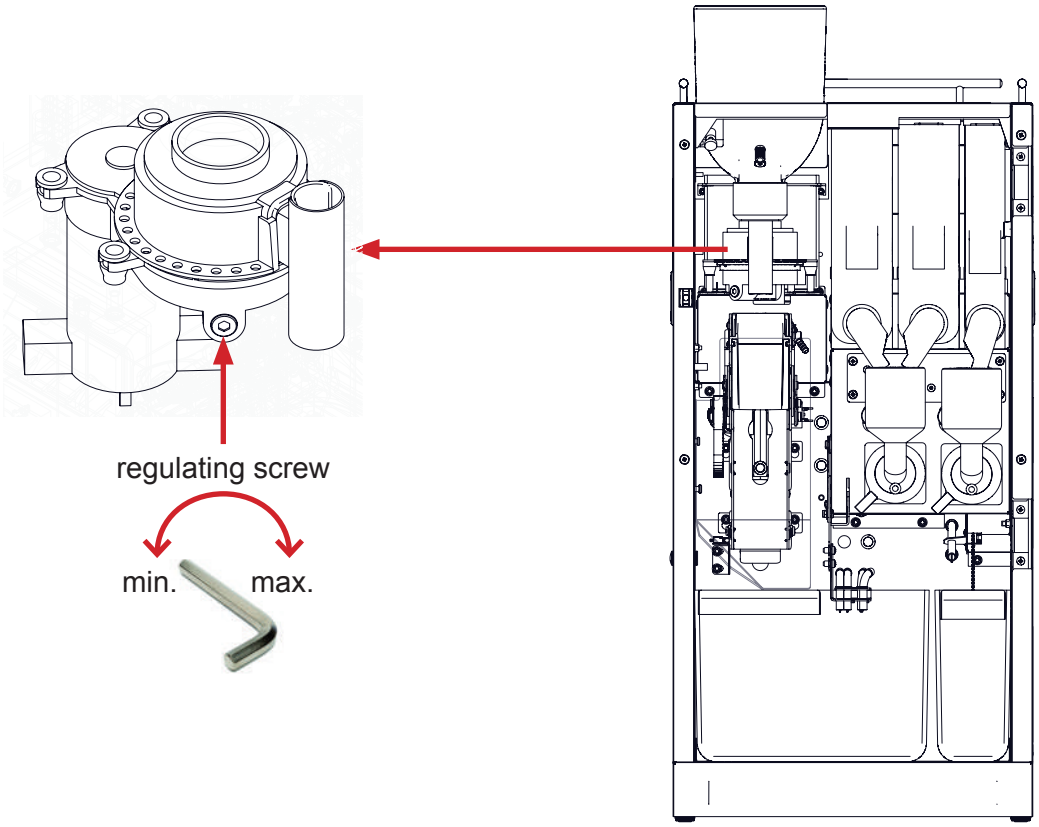

Fig.4.4

4.3.2 Air fine tuning valve adjustment (SMART MILK)

Milk foam adjustment

To adjust the milk foam on the vending machine do the following:

- Make sure that the milk container is installed in the refrigerator near the vending machine.
- Make sure that the milk is fresh and unspoiled.
- Make sure that the silicone milk supply tube at the vending machine inlet is not pinched.
- Make sure that the vending machine milk system was washed beforehand, and all its parts including the cappuccinatore are clean. Inspect the tubes for any sour or coagulated milk.

Make sure that all the above items are observed and proceed to the milk foam adjustment by sequentially executing the following operations:

- Open the vending machine door;
- Insert the service key into the door trip (see section 3.2);
- Switch the vending machine on (see the manual) and wait for the boiler to heat up to the temperature specified in settings. ***To achieve the optimum foam performance the steam boiler temperature should be set to 130°C***;
- Adjust the foam control knob to the middle position (fig. 4.5). For doing this turn the control knob all the way to the left and then all the way to the right. Set the control knob approximately to the middle position;

Fig.4.5 - Milk foam adjustment

- Select a drink with the addition of fresh milk. As the drink is made, observe the milk flow from the cappuccinatore adapter. The flow should be uniform, without any "pulsations" or "jerks" (the foam should be poured into a cup in the form of a smooth stream without any splashes or inflating bubbles).

- Observe the cappuccinatore adapter - it's manufactured of transparent plastic to facilitate its contamination level inspection and adjustment process.

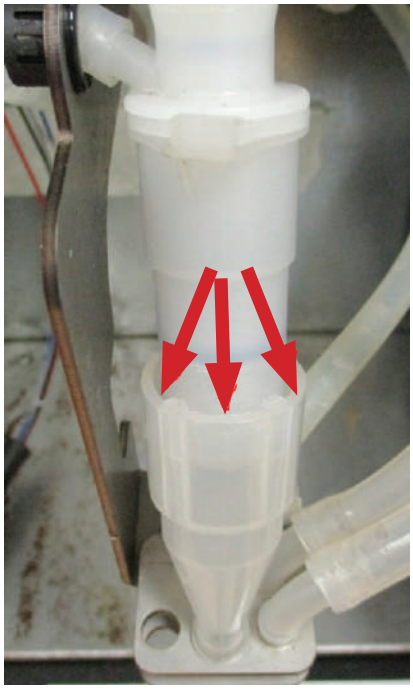

Fig.4.6

- At the cappuccinatore and the adapter joint there's a gap (see fig. 4.6). The foam shouldn't run out of the adapter during the operation.

- If there's no foam coming out, but a slightly foamed milk, turn the foam control knob counter-clockwise. By doing this you are slightly opening the air delivery tap, and the milk foam should start coming out.

- If the foam is squirting out from the above-mentioned gap, this means that there's too much air supplied. Turn the control knob clockwise.

The optimal foam adjustment:
The foam is streamed out uniformly and without any pulsations. The foam doesn't overflow outside the cappuccinatore adapter and should have a fine-porous structure.
When lowering a stirrer to a cup it stands in the foam without declining (the height of the foam should be higher than the middle of the stirrer).

If having trouble adjusting the foam in accordance with the above instruction, proceed to the following section: “Offsetting the range of adjustments on the air fine tuning valve” (see below).

Offsetting the range of adjustments on the air fine tuning valve

This setting may be required for adjusting the air supply during the operation of vending machines with the FRESH MILK if having trouble adjusting the acceptable quality of the milk foam because the milk from different manufacturers has a different composition.

Fig.4.7 - Milk foam adjustment

To adjust the milk foam the following tools are required:

- A 7 mm frontal screwdriver or a 7 mm spanner wrench;
- PH2 cruciform screwdriver

In the case if it's necessary to offset the range of adjustment on the air fine tuning valve, do the following:

1. Remove the tap from the vending machine fastener by unscrewing two nuts (fig. 4.8 and fig. 4.9).

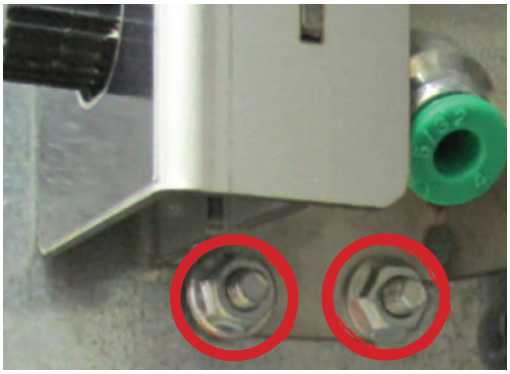

Fig.4.8

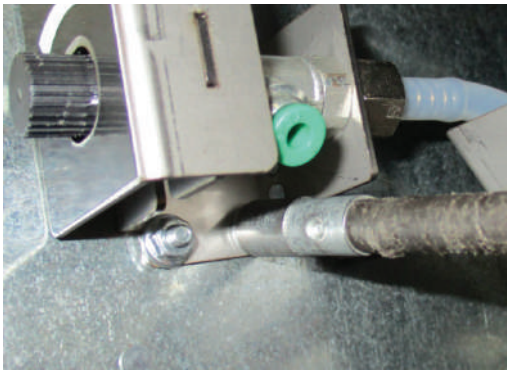

Fig.4.9

2. Unscrew the protective enclosure screw (fig. 4.10).

Fig.4.10

3. Displace the enclosure and remove it from the valve body (fig. 4.11).

Fig.4.11

4. Unscrew the gear sector fixing nut (fig. 4.12).

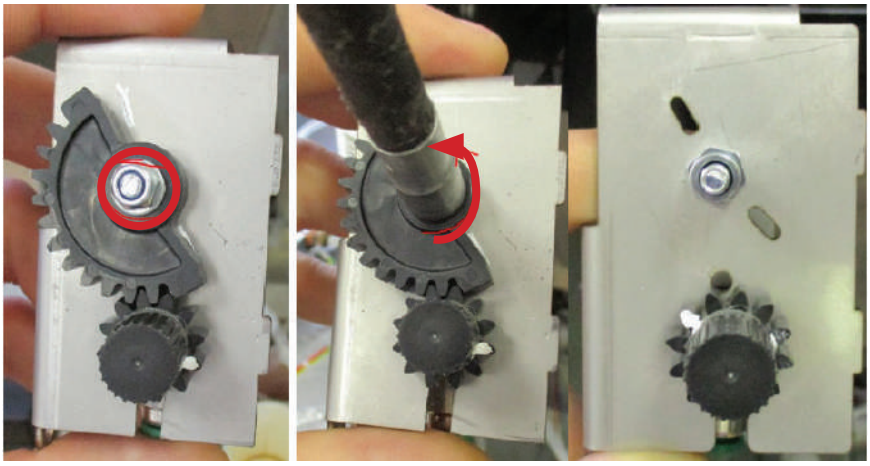

Fig.4.12

5. Carry out the adjustment in accordance with the **"Milk foam adjustment"** section (see above).
6. After obtaining the required result set the geared sector as shown in fig. 4.13.

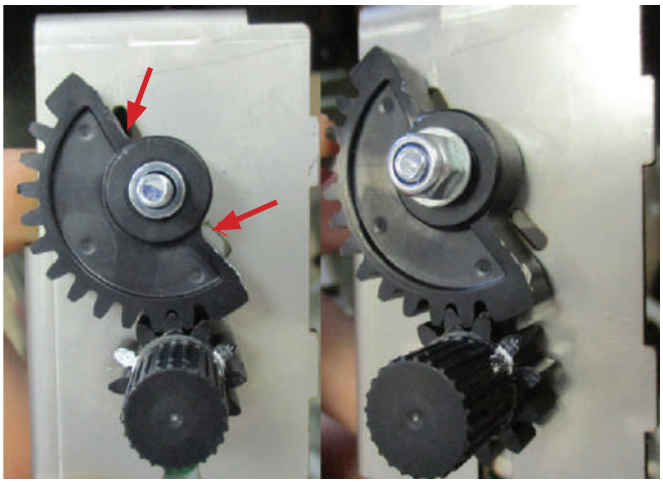

Fig.4.13

ATTENTION! Don't turn the knob after the adjustment. Set the geared sector with minimum off-set (by matching it with the slits).

7. Assemble in the reverse order.

4.3.3 Connecting the vending machine to water supply mains (optional)

The vending machines can also be connected directly to the water supply mains, taking into consideration the applicable laws of the country of use. The inlet nozzle for connection to the water supply mains is situated on the rear panel of the vending machine (see fig.5.4) and comprises of a threaded connector of diameter ¾". The machine is connected using a pipe, which can handle the pressure of the water supply and which is suitable for use with food products (minimum inner diameter of 6mm).

The water pressure in the supply line must be in the range of 0.05 to 0.85 MPa (0.5 – 8.5 bar).

Before connecting the vending machine to the water supply mains: (old connection):

- In accordance with the instruction to the **Configurator** program (see at the website: **www.unicum.ru**), go to the (**Coffee)** tab and in the **(Water container)** field select **(Not installed)**. Create the configuration file and place it to the USB flash drive. In accordance with this manual "load" the file into the vending machine software. Without carrying out this item the rest items are meaningless (the settings will have no effect).
- Set the switch on the switch board of the machine to position **[O/OFF] (**see fig.5.4 pos.2);
- Unplug the machine by removing the plug from the power socket;
- Remove the vending machine's rear panel by removing the screws;
- Disconnect the pump connectors (see fig.4.14a and 4.14b pos.1,2);
- Disconnect the silicone tube (see fig.4.14a and 4.14b pos.3);
- Connect the silicone tube and power connectors to the electric valve (see fig.4.14b);
- Fix the rear wall back in its place;
- Plug the power cord into an electrical outlet;
- Set the switch on the switch board of the machine to position **[I/ON]** (see fig.5.4 pos.2).

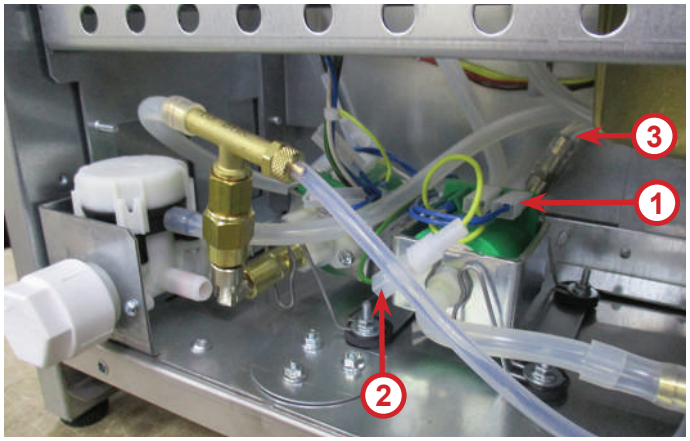

Fig.4.14a

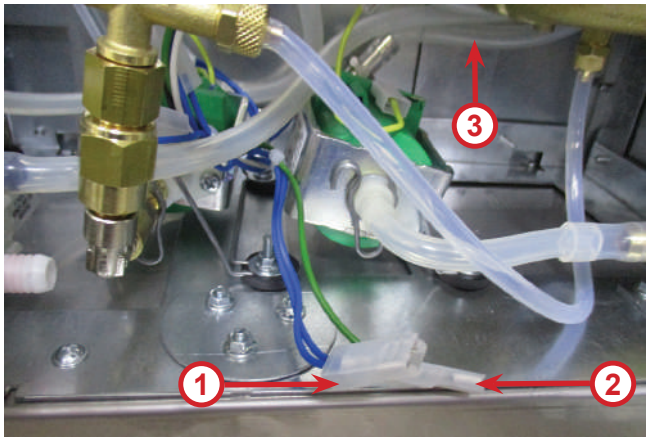

Fig 4.14b

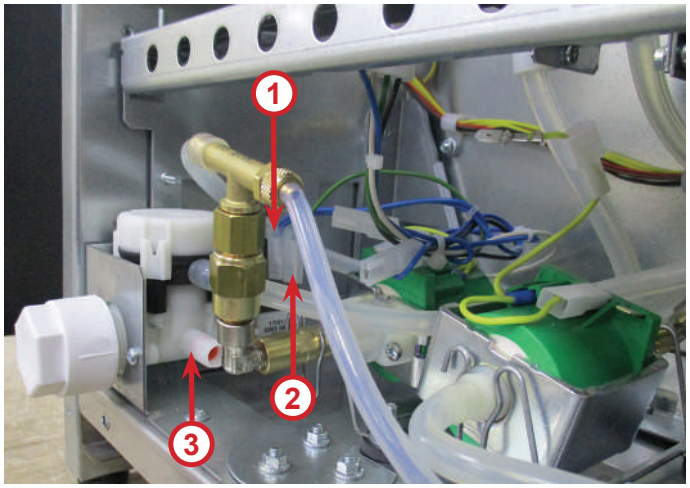

Fig.4.14c

Before connecting the vending machine to the water supply mains: (new connection):

- In accordance with the instruction to the **Configurator** program (see at the website: **www.unicum.ru**), go to the (**Coffee)** tab and in the **(Water container)** field select **(Not installed)**. Create the configuration file and place it to the USB flash drive. In accordance with this manual "load" the file into the vending machine software. Without carrying out this item the rest items are meaningless (the settings will have no effect).
- Set the switch on the switch board of the machine to position **[O/OFF] (**see fig.5.4 pos.2);
- Unplug the machine by removing the plug from the power socket;
- Remove the vending machine's rear panel by removing the screws;
- Remove the clamp from the silicone tube (see fig. 4.15);
- Turn the switch to the "II" position (see fig. 4.15);
- Fix the rear wall back in its place;
- Plug the power cord into an electrical outlet;
- Set the switch on the switch board of the machine to position **[I/ON]** (see fig.5.4 pos.2).

It is recommended to place the water supply tap (valve) outside the machine's body at an easily accessible spot.

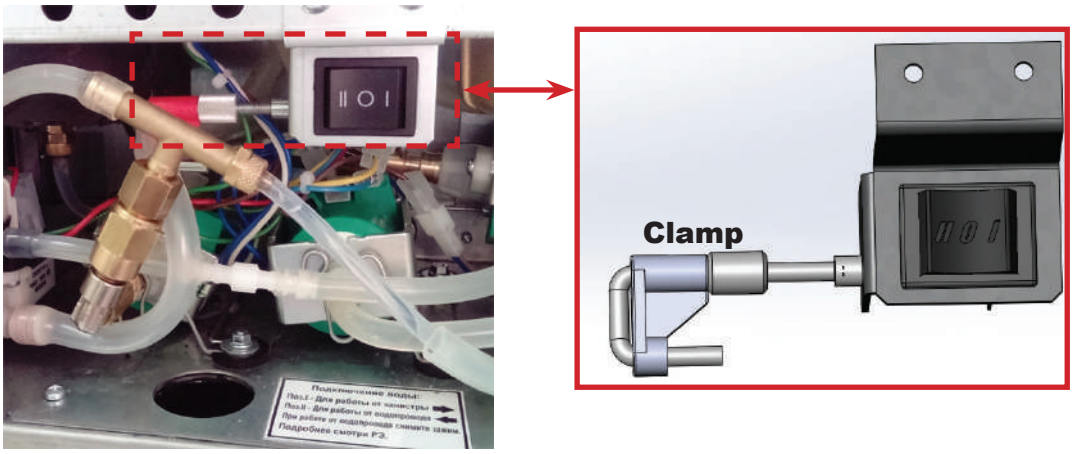

Fig.4.15

The vending machine will switch to water supply network operation mode. To switch to the self-contained water supply mode from the potable water container, perform the described above operations with the exception of the following:

1. In item 1 select the setting **(Installed)**;
2. In item 5 put the clamp back on the tube (see fig. 4.15);
3. In item 6 turn the switch to the "I" position (see fig. 4.15).

To connect the vending machine to the water supply network, use one set of new gaskets only. Don't use the materials repeatedly.

The machine must be connected to the water supply mains, only by a qualified technician!
Any traces of leakage of water show incorrect connection (loose connection) of water supply or improper supply pressure, beyond the pressure range indicated for the vending machine!

5.0 THE VENDING MACHINE'S COMPONENTS

5.1 Appearance

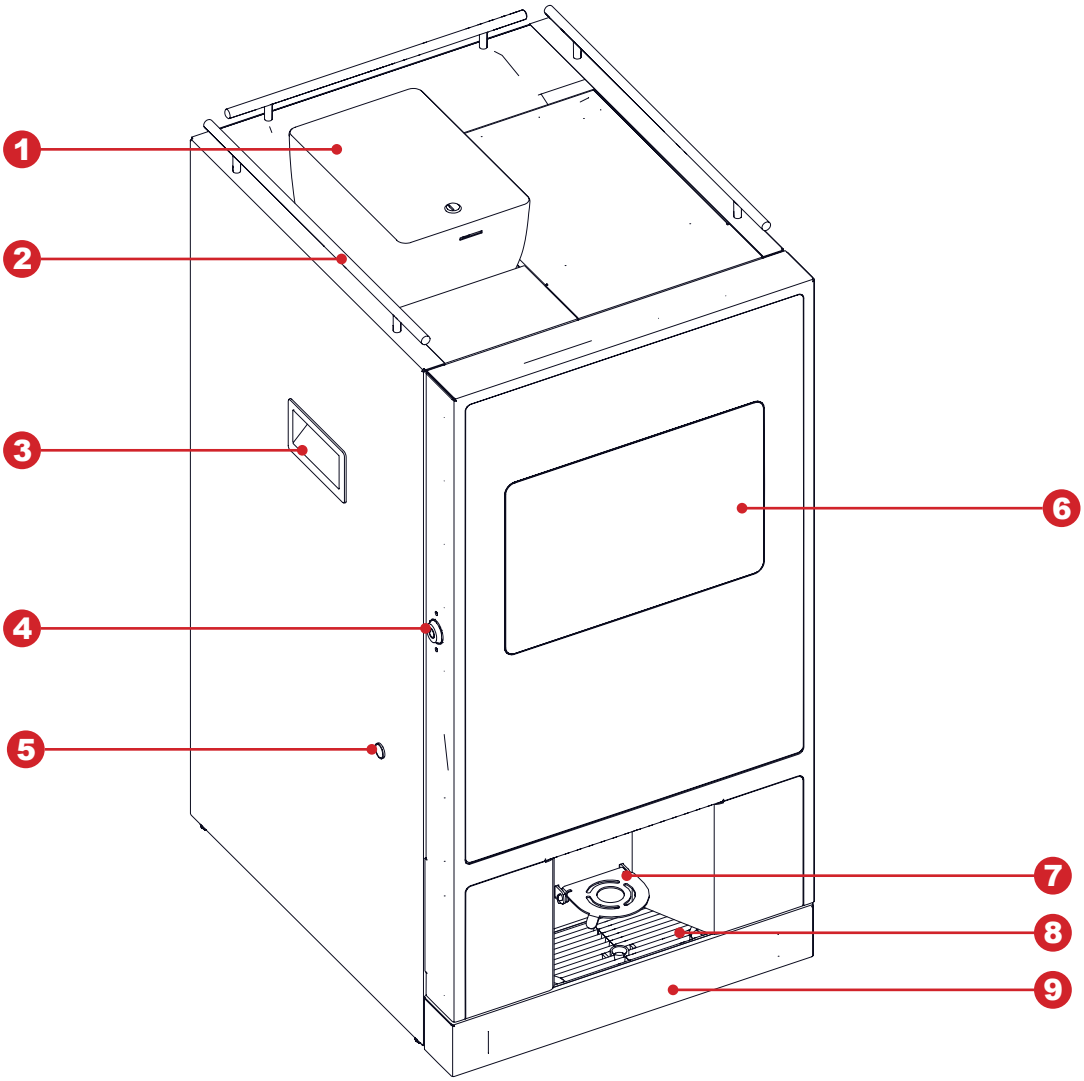

Fig.5.1

1. Coffee bean container
2. Cup retainer
3. Vending machine handle
4. Door lock
5. Milk tube stopper (FRESH MILK)
6. Touch screen
7. Shelf for glasses (is regulated by height)
8. Tray for glasses
9. Pallet

5.2 Internal view (FRESH MILK + SMART MILK)

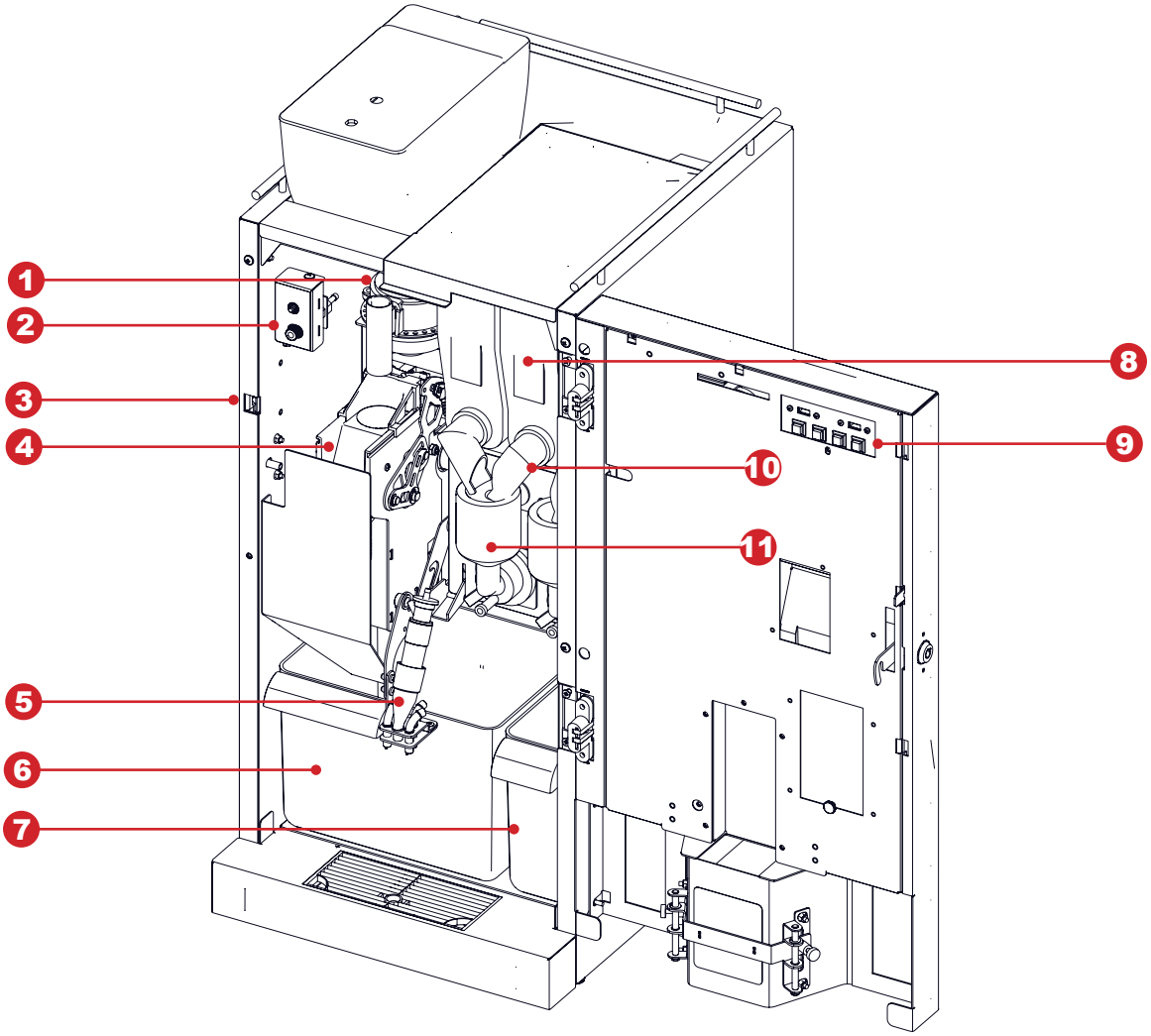

Fig.5.2

1. Coffee grinder and dosing mechanism
2. Milk foam intensity adjustment (SMART MILK)
3. Door trip (for service key)
4. Espresso group
5. Cappuccinatore (FRESH MILK)
6. Container for solid (coffee) wastes
7. Container for liquid wastes
8. Container for soluble ingredients
9. Quick access keypad
10. Container lip
11. Mixer

Note: The connecting tubes are not shown in the figure (see vending machine hydraulic diagram).

Following are installed inside the body: drinks preparation units, ingredients' containers, waste containers.
The vending machine's body is divided into two sections: front and rear.
It is sufficient to open the machine's door to access the front section.
To access the rear section of the machine it is necessary to remove the machine's rear panel.

5.3 Internal view (without door cover)

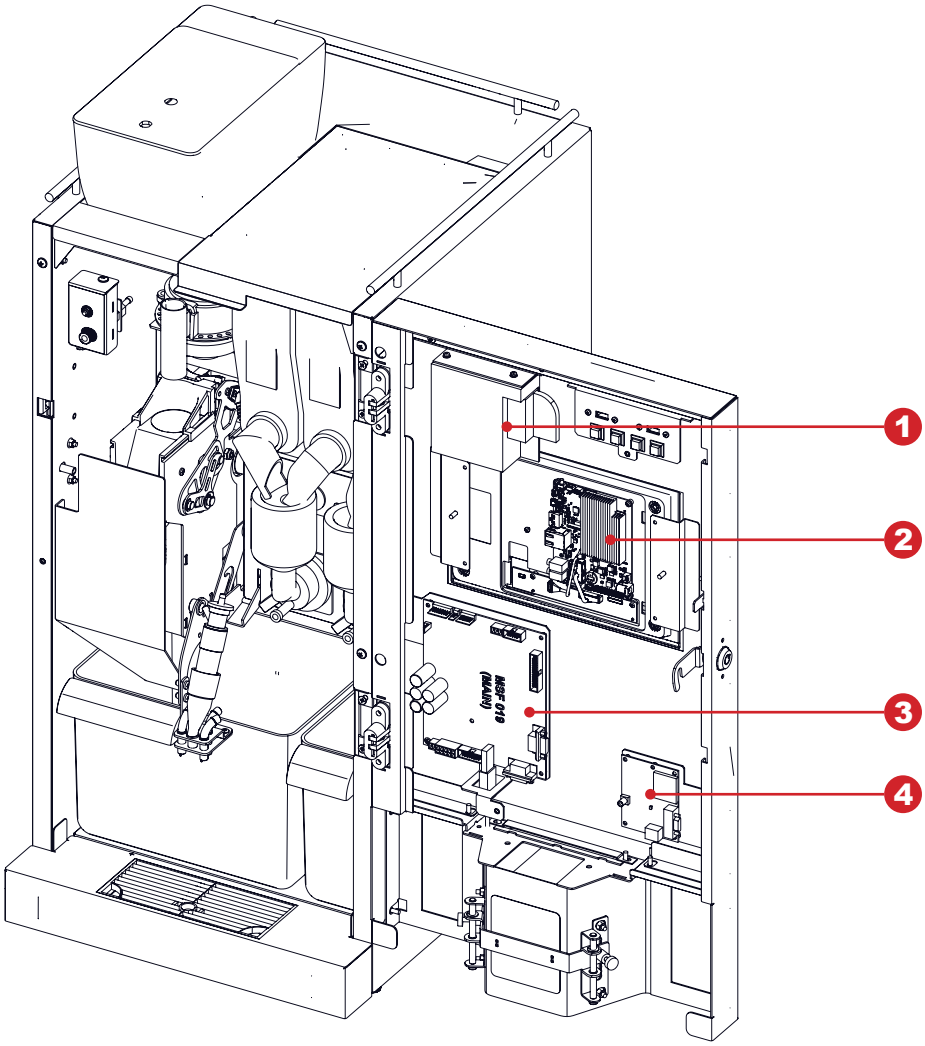

Fig.5.3

1. Monoblock power supply
2. Monoblock (computer block)
3. Main Board 019-03 (controller)
4. Modem (option)

5.4 Back view

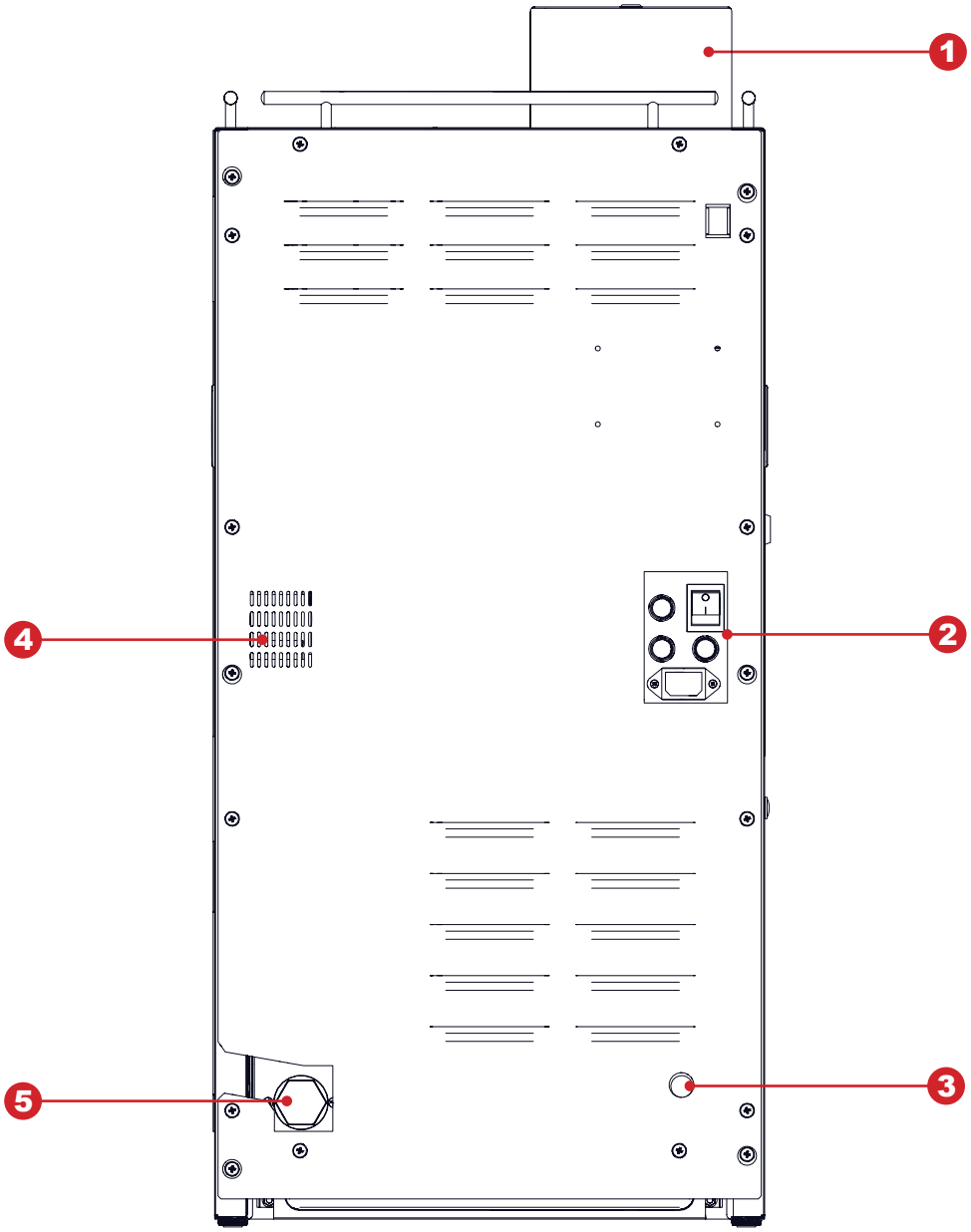

Fig.5.4

1. Coffee bean container
2. Switching unit (switch, fuse holders, power cord connector)
3. Water container connection (internal)
4. Ventilation
5. Water supply network connection (external)

5.5 Containers for instants ingredients and coffee beans

Vending machine comes with three types containers for storing ingredients:

- Coffee bean container (see fig.5.5a);
- Containers for ingredients (see fig.5.5b)
- Container for ingredient (see fig.5.5c)

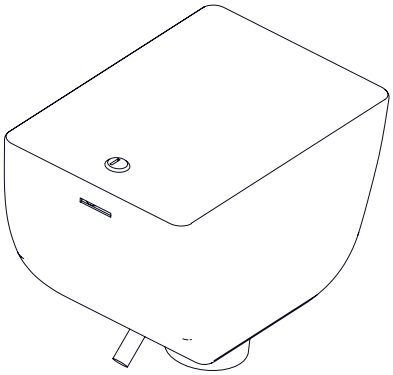

Fig.5.5a

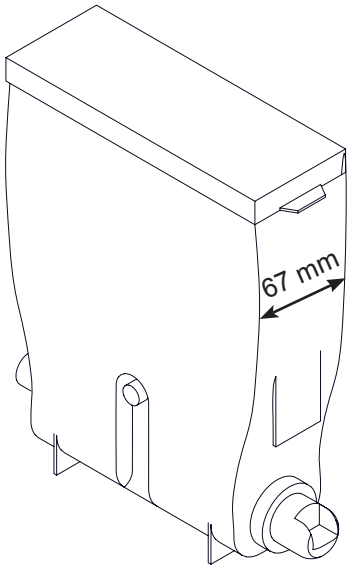

Fig.5.5b

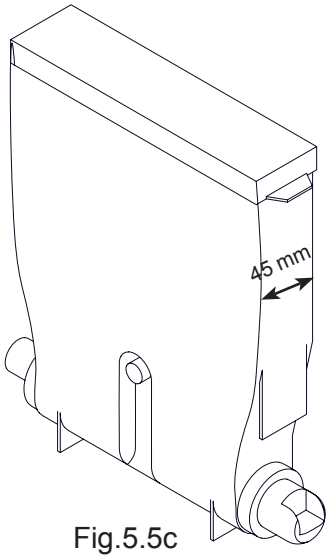

Fig.5.5c

<u>To install and remove the coffee bean container</u>

With open vending machine door, pull the container's clamp, which is located in the left upper corner of the machine (see fig.5.6) and holding the clamp remove the container.

The container can be installed in the reverse order of actions.

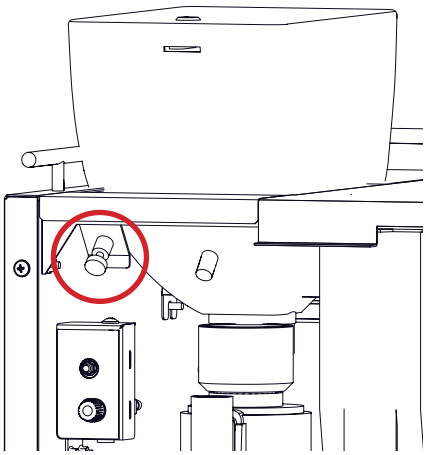

Fig.5.6

Fig.5.7

Filling the instant ingredients containers:

- Open the vending machine's door
- Lift the top lid of the machine
- Lift the lid of the required container
- Fill the container ingredient, avoiding the formation of seals and lumps
- Close the cap container

If necessary (for convenience in filling) the containers can be removed from the vending machine. For the purpose:

- Turn the container's "nose" upwards
- Slightly raise the container using the "nose" in such a way that the container's base grip would be removed from the body
- Pull out the container

The ingredient is supplied from the container using a reducer-motor, which is installed behind the container. The reducer-motor supplies the required dose of ingredient into the mixer.

The quantity of the ingredient for each drink is set in the drinks recipe menu. The quantity is equal to the duration of rotation of the motor multiplied by 100.

Filling the coffee beans into the container

- To fill the container open the lid by using the key (if needed) and fill it with beans.
- To avoid damaging the equipment as a result of impurities, the use of high-quality coffee beans is recommended.
- Comply with the maximum permissible level for the container.
- Close the lid carefully.

After filling the container, make sure that there are no foreign objects in the container. Make sure that the ingredient did not get compressed during the filling process. Remove all remnants or spill-overs of ingredient from the outer surfaces of the container or the machine's parts.

Filling milk into the container (FRESH MILK)

- Install the cooling module next to the vending machine at the left side. Insert the milk supply tube into the cooling module side port.
- Open the door of the cooling module. Remove the milk container and fill it with fresh milk.
- Place the filled milk container back into the cooling module.
- Lower the milk supply tube down to the bottom of the container.
- Close the door of the cooling module.

Note:
The milk should be stored at the temperature from 3.5 to 7 ^{0}C.
Use only cooled fresh long-storage milk (pasteurized or UHT) with 2.5 to 3.6% fat
Fill the container with milk, taking into consideration the maximum capacity of the container.
To avoid problems associated with milk dispensing locate the milk container level with the vending machine and make sure that the milk supply tube lies on the bottom of the container and has no kinks.
For milk storage, the manufacturer recommends using the special milk cooling module (cooler) that was compatibility tested with the standards of the countries, where the NERO vending machine or its modifications are going to be used.
The manufacturer can supply the recommended cooling module complete with the vending machine on demand.
The correspondence of the recommended special cooling module with the standards should be confirmed by the module manufacturer.

5.6 Waste container

The liquid waste container is situated in the lower left part of the machine. You must drop the float into this container. The given float acts as the sensor indicating the container's level of filling.
Except for the liquid waste, which is produced during the preparation of drinks, the process of making coffee from coffee beans, we also have hard waste in the shape of pressed ground coffee, which the espresso group throws out into the waste container, situated in the lower left side of the machine. The quantity of waste is monitored programmatically.
When the software counter reaches the maximum number of drinks (set in the technician menu (equipment) - **Errors** section - **Coffee waste number** setting), made using the coffee beans, such drinks become inaccessible.
To set the counter to zero:

- Open the vending machine door;
- Insert the service key into the door trip (see section 2.2);
- Turn on the vending machine (if it's turned off);
- Remove the coffee waste container (for solid wastes) and remove the wastes;
- 10 seconds after inserting the container back into the vending machine;
- Remove the service key and close the door.

5.7 Autonomous operations kit

In its standard configuration the vending machine is configured to use water from the canister/bottle, which is installed near the machine.
For water supply connection we have a silicone water pipe, which comes with the package (see fig.4.2 pos. 5), which from one end is connected to water inlet (see fig.5.4 pos.3) and from the other end of the tube is immersed into the source of water (canister/bottle).

5.8 Flot chamber, boiler pump, boiler and steam boiler

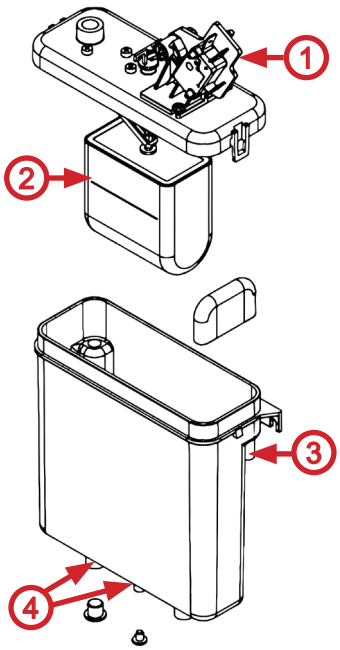

Fig.5.8

The water for the preparation of drinks is supplied by the following group of devices: boiler, which heats the water; boiler pump, which pumps the water into the hydraulic circuit; float chamber, which helps avoid air bubbles and blocks from entering the hydraulic system.

Flot chamber

The float chamber (see fig.5.8) retains the minimum required quantity of water, which is necessary to keep the hydraulic system alive and to ensure the dispensing of drinks, in case the water supply runs dry.

Equipped with a sensor it determines the state of the chamber: filled or empty. During the functioning of the internal pump, the water level gradually falls inside the float chamber until reaching the set level, where the sensor reads as if the chamber is empty. At this moment the water from external source (the valve is opened) or internal source (the autonomous mode pump turns ON) starts filling the float chamber, until the water level sensor determines that the chamber was full. This also forms a permanent water lock. In case of shut down of external water supply or depletion of water in the internal source, the float chamber will not be filled within the set time interval, which will cause the vending machine to be blocked.

Boiler pump

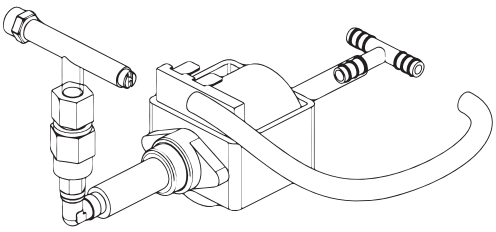

Fig.5.9

1. Pin switch of the water level sensor
2. Float
3. Water inlet connector
4. Water outlet to the boiler

The boiler's electromagnetic valves

During drink preparation, the hot water enters through one of the four electromagnetic valves, located on top of the boiler (see fig.5.11), according to the selection the hot water flows:

1. into espresso group, one of the two mixers, directly into drink disposal nozzle **(not-INSTANT).**

It is strictly prohibited to use water, which does not conform to the given standards of hardness and calcium content (see the vending machine's technical features). This can cause rapid deterioration and failure of the machine's electromagnetic valves!

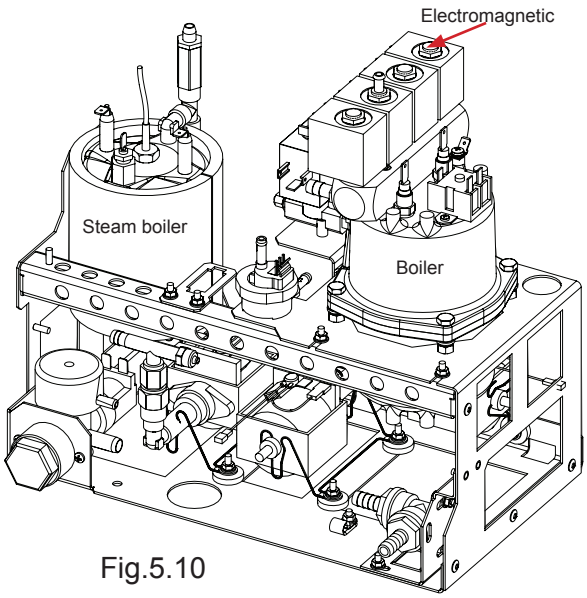

Fig.5.10

Boiler

The boiler is used to heat the water to a certain temperature as is set in the machine's configurations.

The boiler in the machine is placed in the rear section of the vending machine's body (see fig.5.10). To access the boiler, remove the vending machine's rear panel.

To avoid injuries connected with "accidental release of stored energy" and/or "steam burning effect", the boiler has hardware protection from the pressure, exceeding the working pressure maximum range. The excess water heated by the boiler is rejected to the liquid wastes container via the water valves located at the boiler case.

DANGER OF BURNS!
The boiler and steam boiler surface may be hot.
Before any maintenance works cool down and drain water from the boiler.

Steam boiler (FRESH MILK)

The steam boiler is installed in the vending machines with FRESH MILK only. It's intended for heating the water to make steam, which is needed for milk foaming.

The steam boiler is installed in the rear hydraulic unit compartment of the vending machine (see fig. 5.11). To access the steam boiler remove the vending machine case rear wall.

To avoid injuries associated with "accidental release of stored energy" and/or "steam burning effect", the steam boiler has hardware protection from the pressure, exceeding the working pressure maximum range. The excess steam, heated by the boiler, is rejected to the liquid wastes container via the emergency valve located at the steam boiler case.

The boiler has nonseparable structure. In the case of boiler breakage and/or the internal fuse blowing the boiler should be completely replaced. After the boiler replacement, the boiler sensor gaskets and fittings should be visually inspected. This operation is conducted to prevent emergency situations, caused by bad boiler repair.

5.9 Espresso group

The espresso group is used to make coffee using ground beans (see fig.5.11).

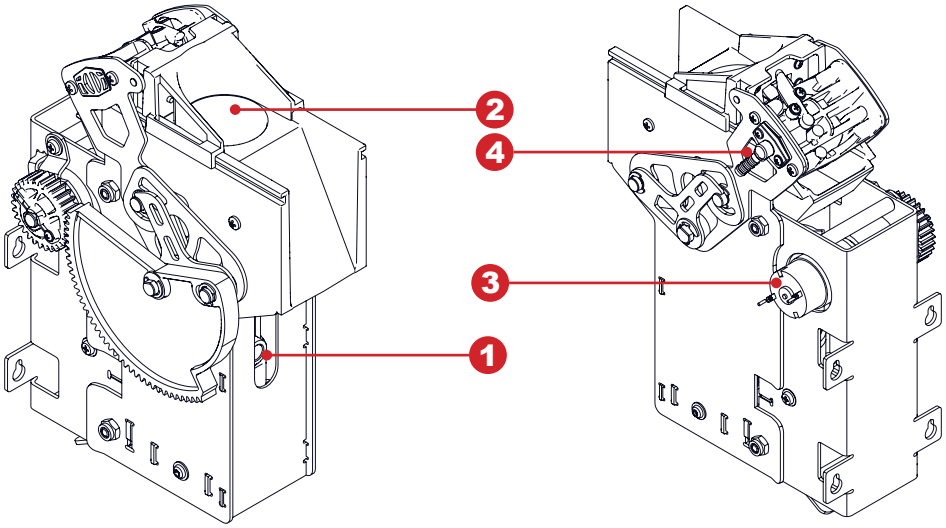

Fig.5.11

1. Hot water inlet from the boiler
2. Ground coffee feed into the coffee maker
3. Reducer-motor of espresso group
4. Output pipe for ready drink

5.10 Mixers for instant ingredients

The instant drinks, which are made of instant ingredients, are prepared in the mixers (see fig.5.12).

Each mixer is installed and connected in front of the container with the relevant ingredient. In the vending machines, one mixer is used for two ingredient containers.

The powder (instant ingredient) is fed by the reducer-motor from the container into the mixer's inlet together with hot water.

The mixer's motor mixes the ingredient and water until a uniform mixture is obtained.

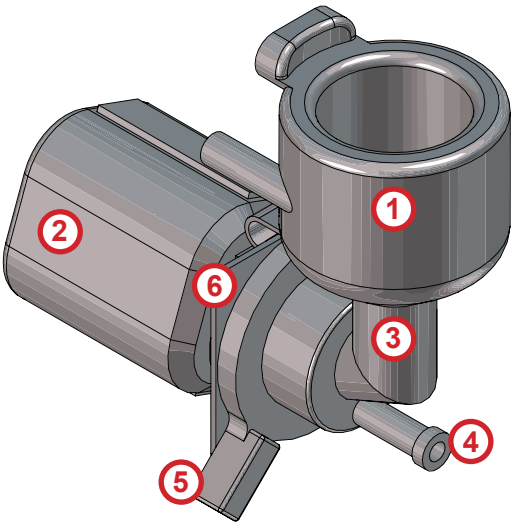

Fig.5.12

1. Lid on mixer's inlet
2. Mixer's motor
3. Mixer's funnel
4. Adapter for drink dispensing pipe
5. Mixer funnel fixator

When needed you should remove the funnel and other plastic parts of the mixer, for planned cleaning and perform the actions in the following order

1. Disconnect the drink dispensing pipe (see fig.5.13a)
2. Turn the handle on the funnel fixator downwards (see fig.5.13b)
4. Carefully pull out the funnel (see fig.5.13c and 5.13d)
5. The assembly procedure is performed in the reverse order

Fig.5.13a

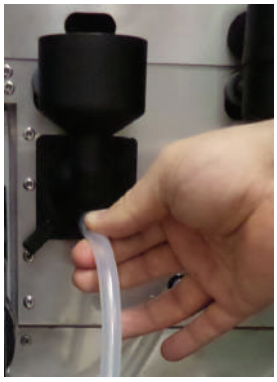

Fig.5.13b

Fig.5.13c

Fig.5.13d

To remove the mixer's motor, loosen the screw, which holds the mixer to the bracket (see fig.5.13d), and remove the motor. After that disconnect the power connector.

6.0 VENDING MACHINE CONTROL AND MONITORING DEVICES

The control system and control the machine consists of the following electronic components:

- Power supply board. Performs automatic actuating device management functions, interrogates sensors and controls the beverage preparation process. The power board contains all the recipes and configurations.

- Controller Board (Main Board). Records statistics controls the vending machine operating mode, works with USB flash drives to save audit data, loads configuration files and updates the vending machine software. The Circuit Board stores all vending machine settings, except for recipes/product images and product names/descriptions in different languages.

- PC unit (Monoblock). Performs functions of information display and interacts with clients, stores images and names/descriptions of all products in different languages, and controls the Main Board, for which purpose it's connected via the Ethernet.

The main vending machine mode is the vending mode, in which the customer service and vending machine units and components monitoring are implemented. The switching to this mode is carried out immediately after the vending machine (controller) is switched on.

The service mode is intended for equipment testing, units and components parameters adjusting, and information about the drinks management (name, price, recipe, etc.)

The switching to the service mode open the vending machine door and insert the service key into the door trip (see section 2.2).

Then press the button (operator menu or menu technician) on the quick access keypad, located on the inner side of the vending machine door (see section 5.2).

6.1 Main Board (controller)

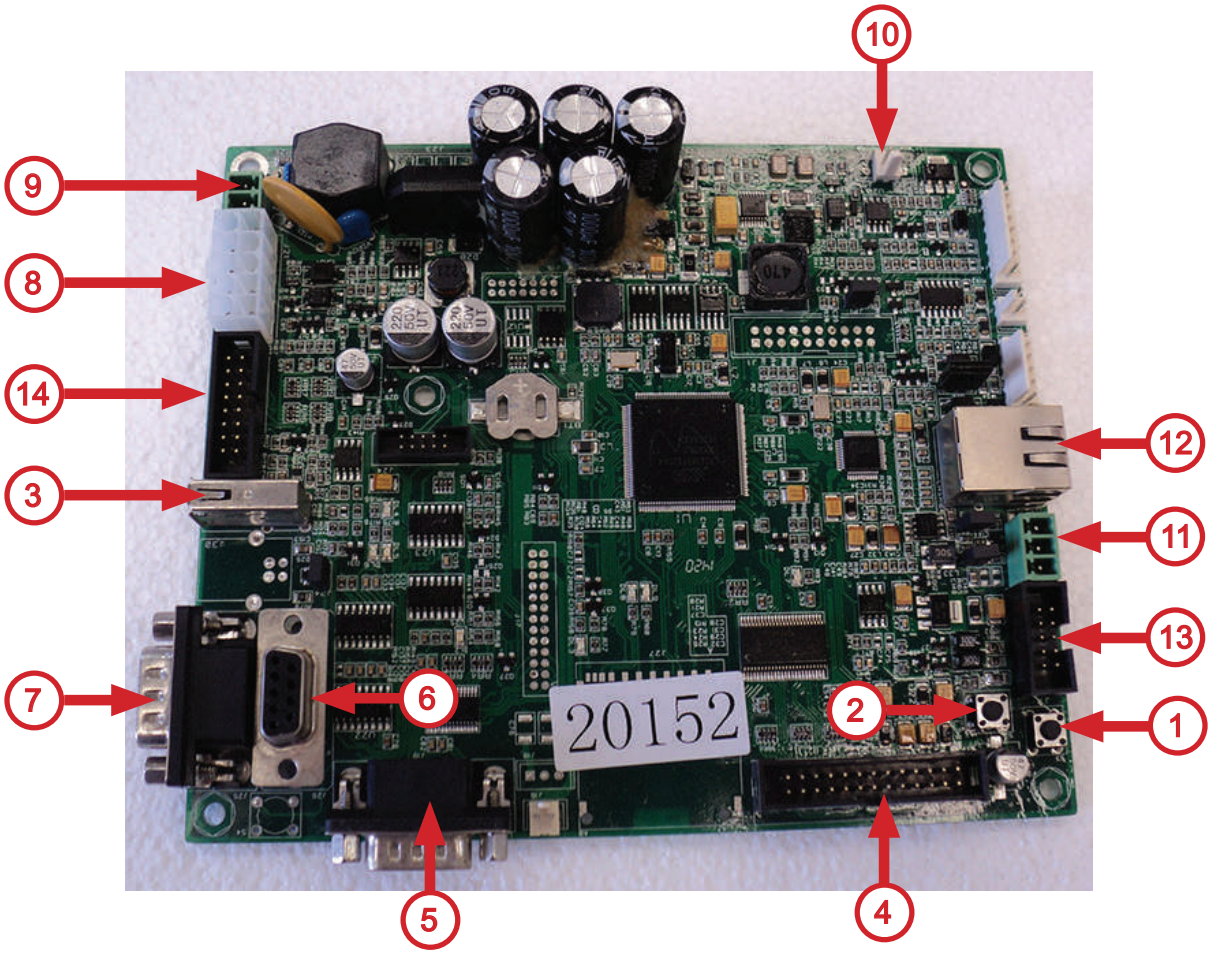

Fig.6.1

1. Operator's menu access button (used as reserve button, for use when regular service button does not work
2. Technician's menu access button (used as reserve button, for use when regular service button does not work
3. USB connector (socket)
4. The connector is not used
5. Modem connector
6. RS232 card reader connector
7. The connector is not used
8. Modem power and MDB payment system connector
9. Controller board power connector (~24V)
10. The connector is not used
11. Power board connector (CAN-BUS)
12. Vending machine PC unit connector (Ethernet)
13. The connector is not used
14. The connector is not used

6.2 Quick access keypad

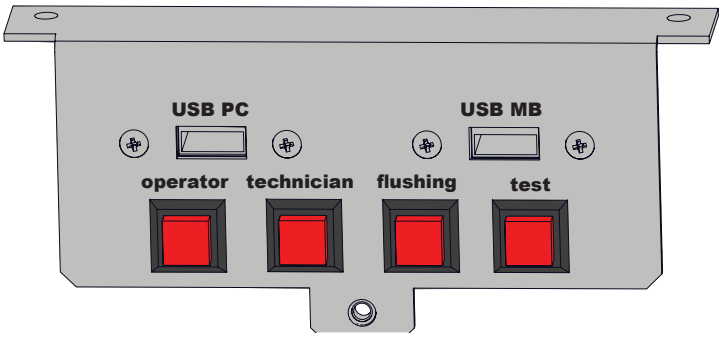

Fig.6.2

The machine has a quick access keypad, which has 4 (four) buttons and two USB-connectors. This keypad is installed on the inner side of the machine's door (see fig.6.2 and 5.2 pos.10).

- **Operator's menu** - access to operator's menu
- **Technician's menu** - access to service engineer's / technician's menu
- **Flushing** - access to menu option for flushing the vending machine's various units
- **Test** - allows you to make a drink without paying, for purposes of checking drink quality and setting it
- **USB PC -** the connector for connecting a USB flash drive to the vending machine PC (Monoblock)
- **USB MB** - the connector for connecting a USB flash drive to the controller board (Main Board)

6.3 Touch screen

Fig.6.3

The touch screen is located on the front side of the vending machine door. There're 10 icons with the images of drinks on the screen (see fig. 6.3). Each button corresponds to a drink, specified in the vending machine planogram.

The touch screen in the vending mode is used for selecting drinks.

In maintenance mode, the touch screen is used for adjusting the vending machine settings and displaying the technical information.

7.0 VENDING MACHINE'S WORKING PRINCIPLE

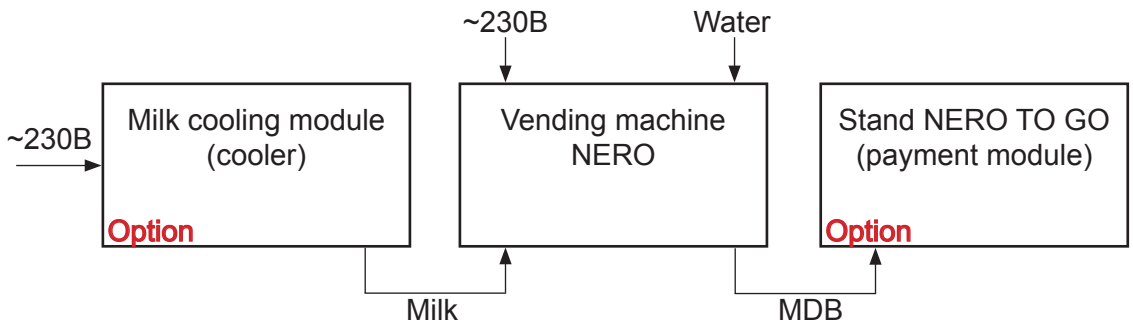

Milk cooling module (cooler)

- Cooling system: cools stored milk
- Milk container: milk storage

Vending machine

- Makes and doses hot drinks
- Steam boiler: generates steam for milk foaming (FRESH MILK)

Payment module

- Allows you to make cash and / or non-cash payments
- Storing cups and other accessories for drinks

The vending machine performs making and selling coffee-based drinks with the addition of soluble ingredients and instant coffee drinks, as well as adding foamed milk into drinks for vending machines with the FRESH MILK. After the customer chooses a drink by touching the drink icon, the vending machine automatically makes and gives out the selected drink.
In the case of payment module installed the customer should deposit a credit for the drink first and then touch the icon with the selected drink.

To make the process more interactive or visible, the drink disposal section is fitted with an LED board, which changes its colour, depending on the process underway inside the machine

To make the process more interactive or visible, the drink disposal section is fitted with an LED board, which changes its colour, depending on the process underway inside the machine:

- Blue colour - the drink was prepared;
- Red colour - the drink is prepared.

After the drink preparation process is completed the colour of the LED light changes from red to blue and a single audio signal is given.

The drink preparation and disposal operation comprises of the following steps (see below).

7.1 Placement of the cup

Before choosing a drink place the cup into the compartment for giving out drinks. Then select the image of the drink on the touch screen.
For small cups, the special folding height adjustable shelf is provided in the compartment (see fig. 5.1 pos. 7).

To avoid spilling over of the drink, into the disposal area tray, please make sure to place the cup in the disposal tray before selecting the drink!

7.2 Preparation of drinks

Instant drinks

These drinks are prepared by continuously mixing the instant ingredient (powder) with hot water and then mixing various mixed ingredients in accordance with the drinks recipe, which is set using the vending machine's service menu.

To make the drink the water is pumped into the float chamber, from where it goes into the boiler, until it is filled. The boiler heats the water and maintains it at the temperature level set in the vending machine's configurations.

The required quantity of the ingredient is poured out of the container into the mixer. The quantity of the ingredient is set in accordance with the selected drinks recipe.

Opening one of the valves of the boiler the hot water is supplied to the required mixer, which is located near the container with the required ingredient.

When the water flows into the mixer, the ingredient is solved into the amount of water set in the recipe.

Water and the ingredient are mixed inside the mixer until the required drink is obtained. From the mixer the drink flows through the dispensing nozzle into the cup.

Coffee bean drinks

Coffee beans go from the coffee bean container into the coffee grinder, where they are ground and fed into the dosing apparatus (if the dosing apparatus will not be filled within 10 seconds the vending machine will automatically block the dispensing of ground coffee drinks).

The dosing apparatus activates, feeds the ground coffee into the espresso group, after which the espresso group closes and the coffee is pressed.

After this hot water release valve is opened towards the espresso group, the internal pump turns ON and hot water from the boiler reaches the espresso group.

The water flows through the pressed coffee tab and flows out into the cup.

After the set amount of water has flown through the espresso group, the flow stops and the used coffee is disposed of into the waste container.

Adding the foamed milk into drinks (FRESH MILK option)

Milk is taken from the milk storage container by the milk supply tube, mixed with air and supplied to the cappuccinatore. Steam is also supplied from the steam boiler to the cappuccinatore for foaming milk.

To avoid problems associated with milk dispensing locate the milk container level with the vending machine and make sure that the milk supply tube lies on the bottom of the container and has no kinks.

To adjust the milk flow rate from the container the Hofmann clamp (see fig. 4.2 pos. 8) is used, which is included in the vending machine scope of delivery with FRESH MILK option. The milk flow rate is adjusted by the clamp screw (the flow rate is lowered when the screw is tightened, whereby the milk foam becomes hotter and "airy" and vice versa).

Use only pasteurized and UHT milk!
Milk fat content should be in the range of 2.5 - 3.6%.
The milk should be stored at a temperature range from 3.5 to 7 ^{0}C.

7.3 Dispensing the drink

After preparation the drink flows into the cup, which is placed in the disposal area tray, the LED light in the disposal area changes colour from red to blue and the customer can remove the cup with the drink from the disposal area.

DANGER BURN! Please be careful, because the machine uses hot water for drinks' preparation. To avoid any accidents or injuries, do not remove the cup from the disposal area, before the preparation process is completed!

8.0 DESCRIPTION USER MENU

8.1 Home screen

Each time the vending machine is switched on, it undergoes the all systems test (initialization). After the test completion the vending machine changes to the vending mode, showing the user menu on the screen (see fig. 8.1).

Fig.8.1

On the initial screen, the various hot drinks are offered for selection. They are shown as images (icons) with drink names.

1. Drink selection
Touch the icon to select the desired drink.

2. Switch language
Here the language of the user menu is set.

3. Greeting
Here the greeting string is displayed.

4. Information
Here the vending machine internal clock and boiler heating temperature are shown.

8.1.1 Drink choice

Touch the icon with the desired drink on the initial screen (see fig. 8.1). The image will appear on the screen (see fig. 8.2).

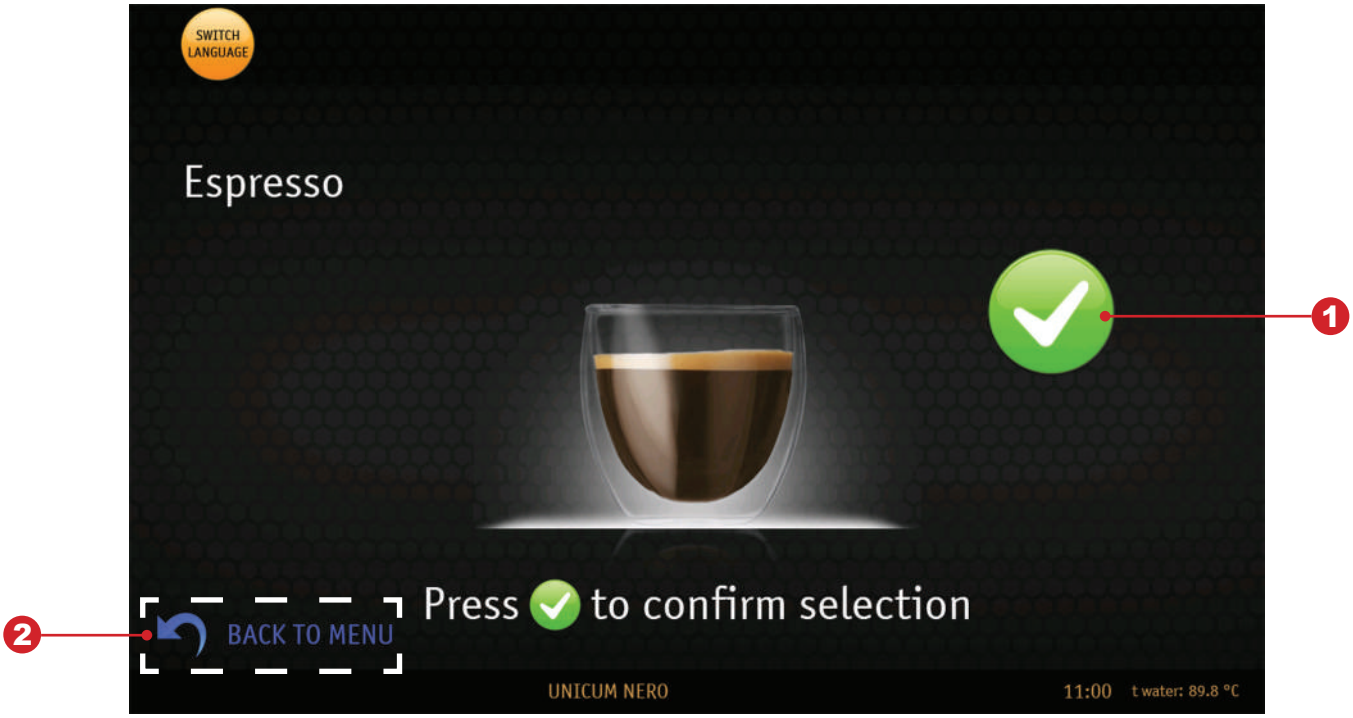

Fig.8.2

1. Start-up

Confirmation of the selection. After touching the screen the vending machine will start the operation of making the selected drink.

2. Back to menu

The return to the initial screen (see fig. 8.1).

8.1.2 The process of making the drink

After the confirmation of the selection, the image will appear on the screen (see fig. 8.3).

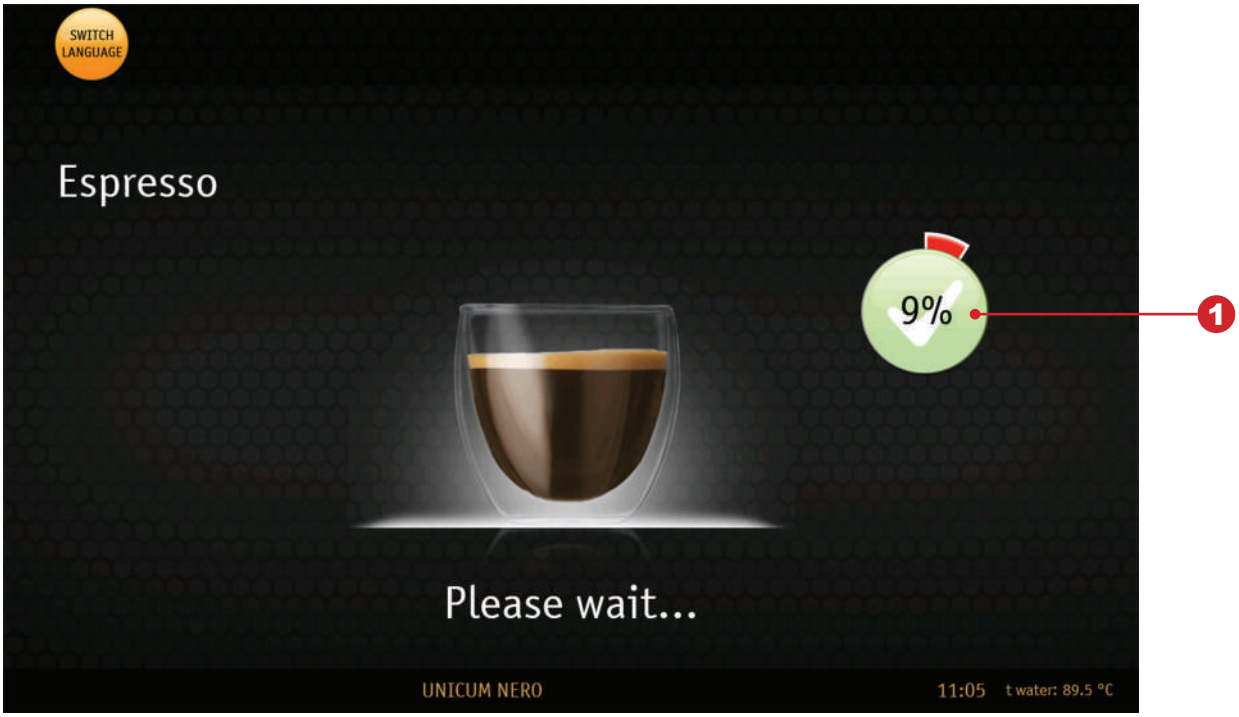

Fig.8.3

1. Percent

Here the drink readiness (percentage wise) is shown. When the scale reaches 100% the drink is ready.

8.1.3 Coffee error

When the giving out of coffee beans based drinks are blocked (coffee error, no beans, etc.) the image is shown on the screen (see fig. 8.4). To unblock the giving out of drinks eliminate the cause of the blockage. At the same time, other drinks are ready for giving out.

Fig.8.4

9.0 DESCRIPTION SERVICE MENU - MENU TECHNICIAN

The vending machine servicing is realized in the SERVICE MODE. To optimize the servicing the vending machine is supplied with two types of the SERVICE MENU with different rights.

- **Service engineer menu/Menu technician:** provides the access to all controller software functionality. To enter the menu open the vending machine door, insert the service key into the door trip, and press the (Menu technician) on the quick access keypad (see section 6.2).

- **Operator menu:** provides the access to the vending machine functionality during the periodic maintenance, such as the event log, equipment operation and faults information, access to setting up the information about the drinks, and the viewing of the sales statistics. To enter the menu open the vending machine door, insert the service key into the door trip, and press the (Operator menu) on the quick access keypad (see section 6.2).

Note: Input the password for accessing the menu technician/operator (if the password is set). The password is set in the menu technician settings.

9.1 Menu technician

After accessing the menu technician, the menu technician main screen is shown (see fig. 9.1) with menu sections. To select the required menu section, touch its name. Then the page of the section with settings is shown.

Fig.9- Main page

<u>Menu navigation buttons</u>

Exit Menu button - - when pressed the exit from the menu technician to the user menu is realized (vending mode).

Back button - when pressed the jump to the menu technician main page is realized (see fig. 9).

9.1.1 System

9.1.1.1 General

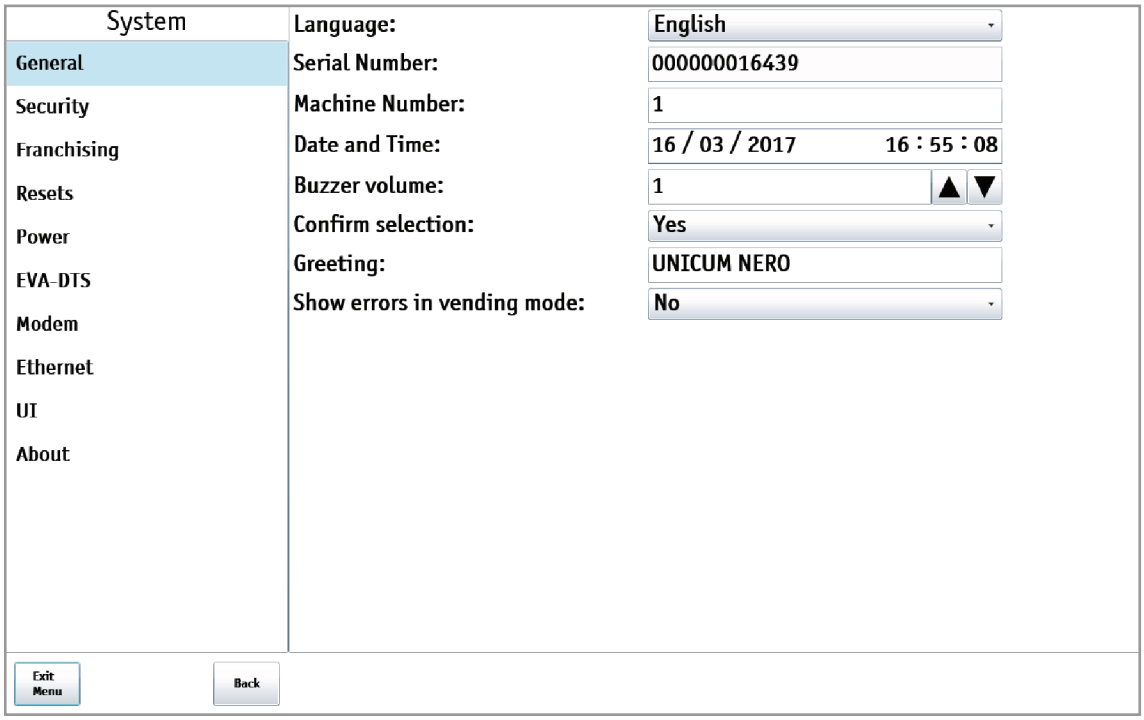

Fig.9.1 - System (General)

NAME	DESCRIPTION	VALUE
Language	Shows the language, to which the vending machine automatically switches every time it returns to the initial screen. The customer can change the language, but after the vending machine returns to the initial screen, the language will change back to this setting	Language selection
Serial Number	Shows the Controller Board (Main Board) serial number. It's a 12-digit number, recorded into the controller board firmware during its manufacturing (it's unique and can't be changed via the vending machine menu).	12-digit number
Machine Number	Arbitrary number to identify the Machine. This number is used to name the configuration files, which makes it possible to consider this number as the number of the given group of Machines. Numbering several machines with a single number enables you to create configuration files for the given group of Machines.	Enter number
Date and Time	Setting date (dd/mm/yyyy) and time (hh:mm:ss) the internal clock of the machine.	Enter date and time
Buzzer volume	Selecting the volume level of the machine gun, which is included at the end of the sale. • 0 - sound off • 4 - maximum volume	Enter number 0...4
Confirm selection	If the selection of the drink is set to YES, you must confirm the selection (see figure8.2)	Yes No
Greeting	Setting the welcome text that is displayed on the touch screen of the machine in sales mode (message addressed to buyers).	Enter text
Show errors in vending mode	• **YES** - error display with error description in vending mode (customer service). Besides the error text is displayed at the bottom of the page, where the greeting is displayed. If there are several errors they are displayed in rotation.	Yes No

9.1.1.2 Security

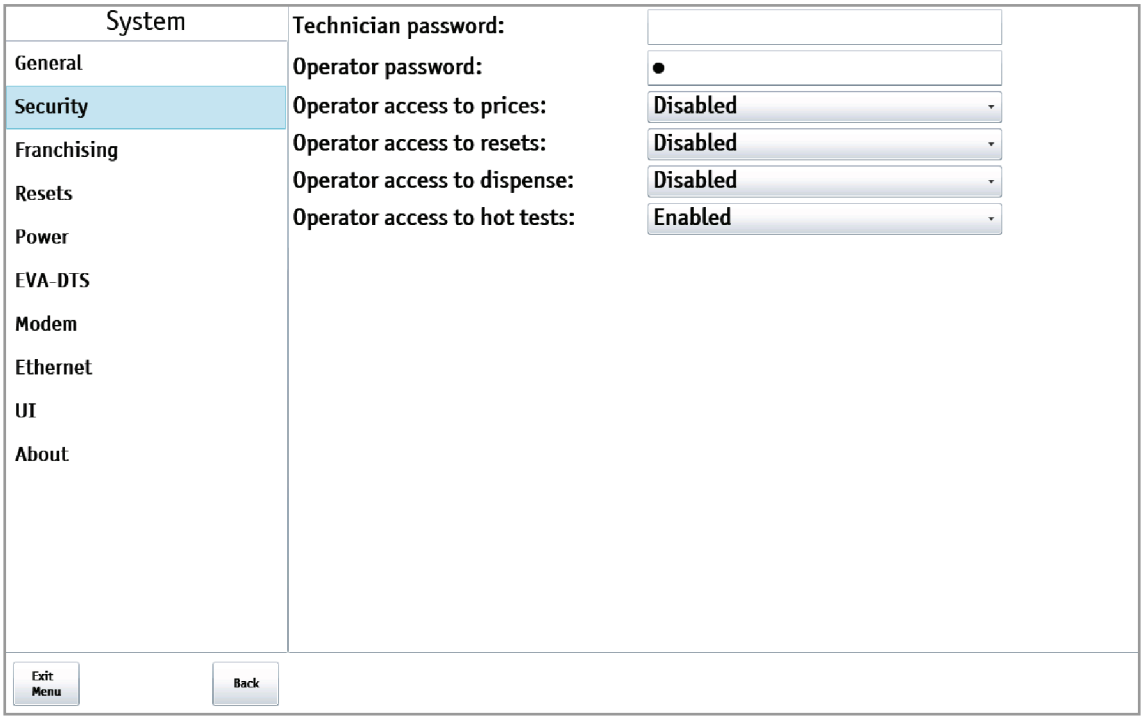

Fig.9.2 - System (Security)

NAME	DESCRIPTION	VALUE
Technician password	Enter / change the password technology. When entering a password will be prompted when entering the menu technician	8 digits, 0 ... 9 0 - password not set
Operator password	Enter / change the password of the operator. When entering a password will be prompted when entering the operator menu.	8 digits, 0 ... 9 0 - password not set
Operator access to prices	Setting access rights of the operator of the machine operator menu to a change in the price of drinks. Setting is only relevant if payment systems are available.	Disabled Enabled
Operator access to resets	Setting access rights of the operator of the machine operator menu to perform the reset time (discharged) meters	Disabled Enabled
Operator access to dispense	Setting access rights of the operator of the machine operator menu to issue coins through the operator menu button [Manual fill]. Setting is only relevant if payment systems are available	Disabled Enabled
Operator access to hot tests	The setting of the vending machine operator access rights from the operator menu to the vending machine functional tests.	Disabled Enabled

9.1.1.3 Franchising

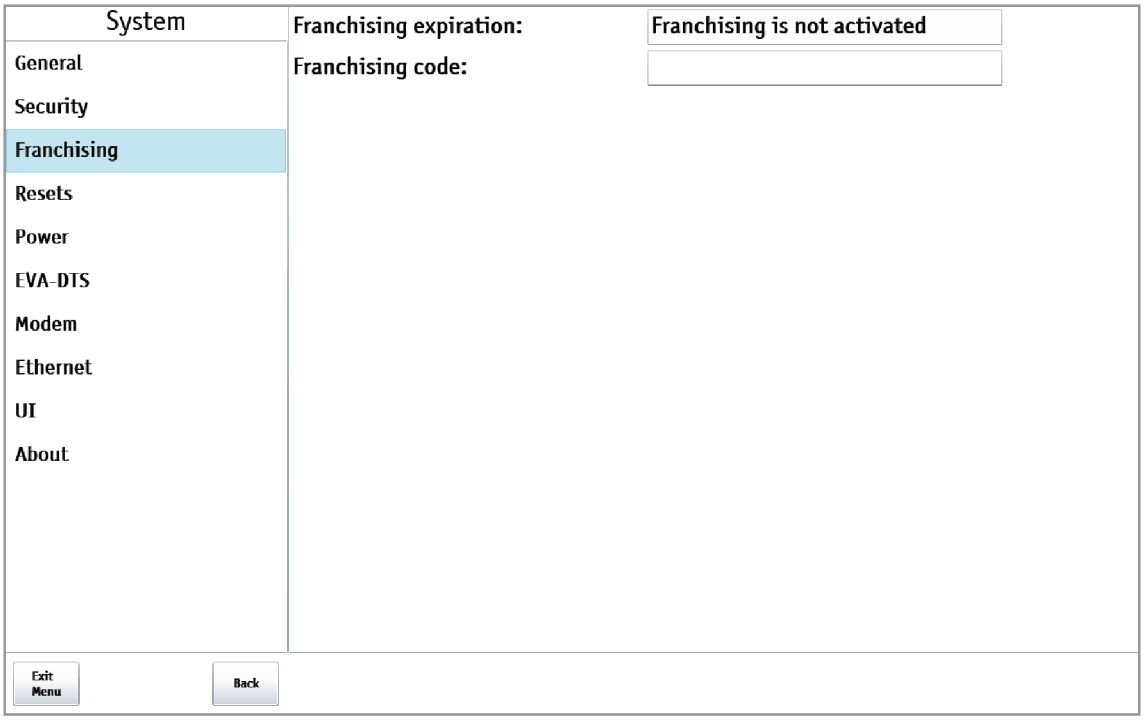

Fif.9.3 - System (Franchising)

NAME	DESCRIPTION	VALUE
Franchising expiration	The date, after the expiry of which the vending machine stops operating until the renewal of a lease. The setting is actual only when the franchising code is input.	
Franchising code	Enter the date in encoded format, to which it is possible to operate the machine (after that date automatic stop working before the extension of the lease term).	16 characters 0...F

9.1.1.4 Resets

Fig.9.4 - System (Resets)

TOUCH BUTTON	DESCRIPTION
Reset Audit	Reset temporary audit statistics
Reset UI	Reset specific settings for vending machine. At the current moment it is - default language and list of available languages **(setting System - UI)**
Factory Defaults	Reset all machine settings to factory defaults
Full Reset	Resets all settings and counters to the initial values (not recommended).
Reset Totals	Reset of all counters, clearing the list of events

9.1.1.5 Power

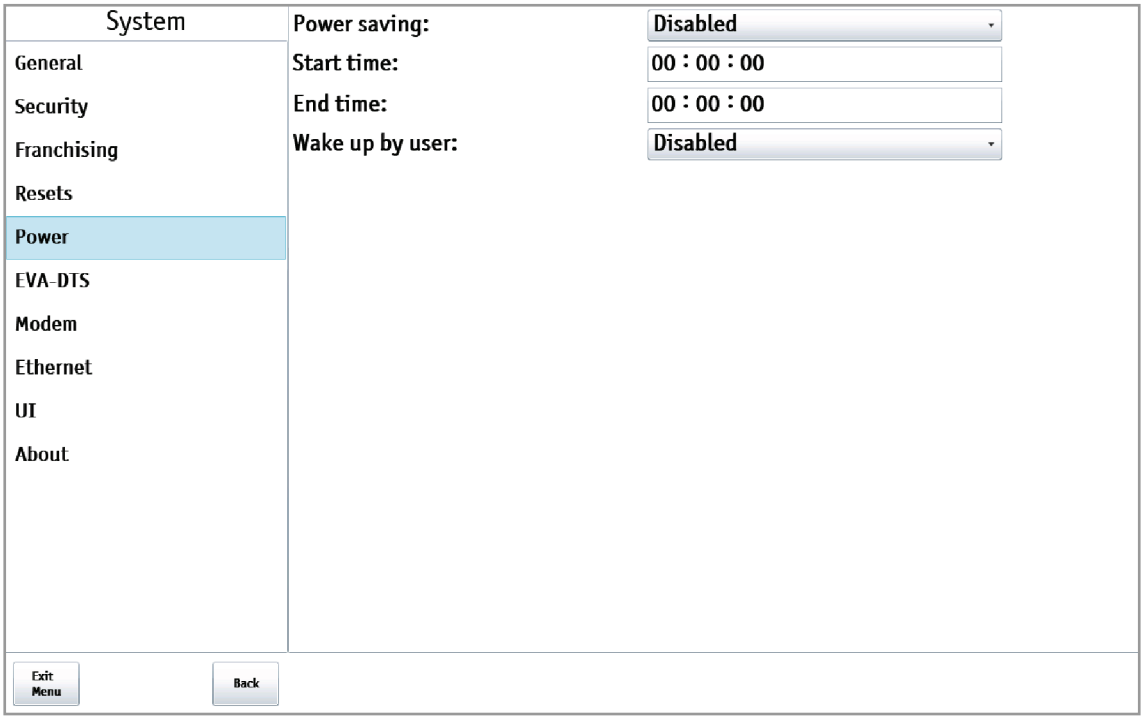

Fig.9.5 - System (Power)

NAME	DESCRIPTION	VALUE
Power saving	On / off power saving mode	Disabled Enabled
Start time	Time when the Machine automatically switches to power saving mode. If the setting values **[Start time]** are less than the setting values **[End time].** For example 5:00 and 10:00 respectively, then the power saving mode is switched between these limits. If the setting **[Start time]** is greater then the setting **[End time]** (for example 10:00 и 5:00), the power saving mode is enabled from the setting **[Start time]** to 23:59 and from 00:00 to the setting **[End time]**.	Enter the time (hh:mm:ss)
End time	Time when the Machine automatically switches out of power saving mode	Enter the time (hh:mm:ss)
Wake up by user	Indicates whether the customer can wake the sleeping machine by himself by tapping his finger on the touch screen of the machine	Disabled Enabled

9.1.1.6 EVA-DTS

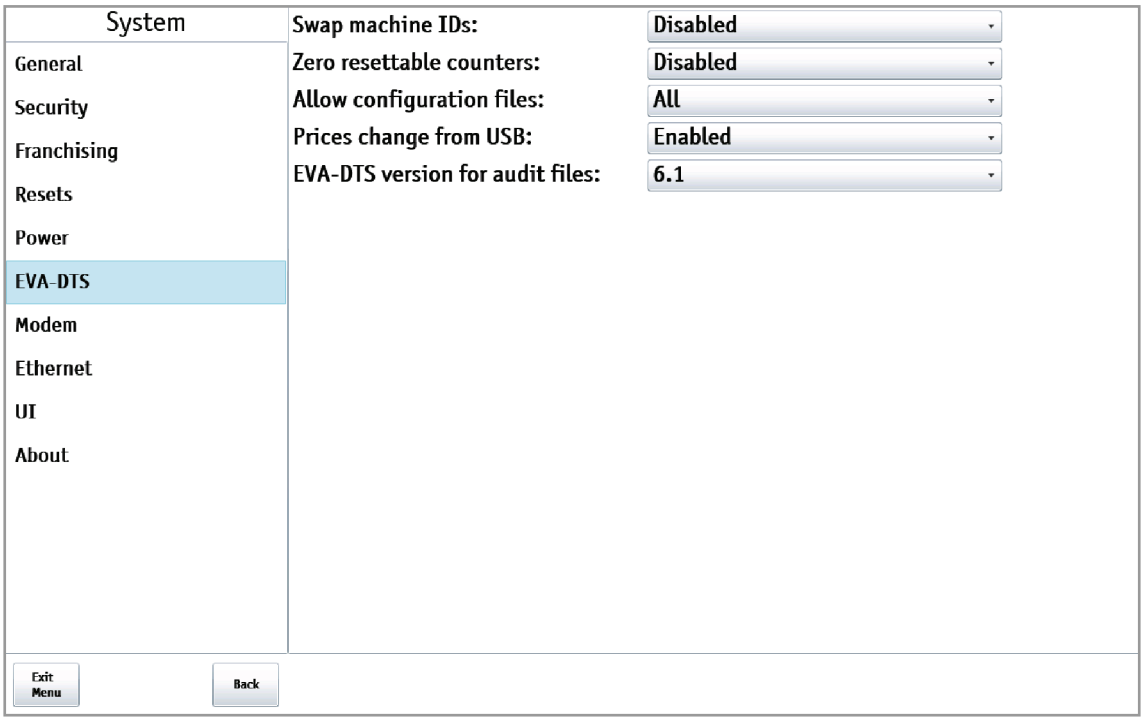

Fig.9.6 - System (EVA-DTS)

NAME	DESCRIPTION	VALUE
Swap machine IDs	Permits swapping the fields (the vending machine number is replaced by the Main Board serial number, and the Main Board serial number is replaced by the vending machine number). A vending machine number is a number that is set in the settings and which is possible to change. The Main Board serial number is a 12-digit number, recorded into the controller board firmware during its manufacturing (it's unique and can't be changed via the vending machine menu).	Disabled Enabled
Zero resettable counters	**Enabled** - Reset temporary data after saving (copying) of files to USB drive	Disabled Enabled
Allow configuration files	• **All** - Allows downloads from all configuration files • **Only CONF_GEN** - Allows downloading only from configuration files of only the format CONF_GEN	All Load Conf_Gen only
Prices change from USB	Allows to change price using USB flash drive	Disabled Enabled
EVA-DTS version for audit files	Selecting the version of EVA-DTS file	6.0 6.1

9.1.1.7 Modem

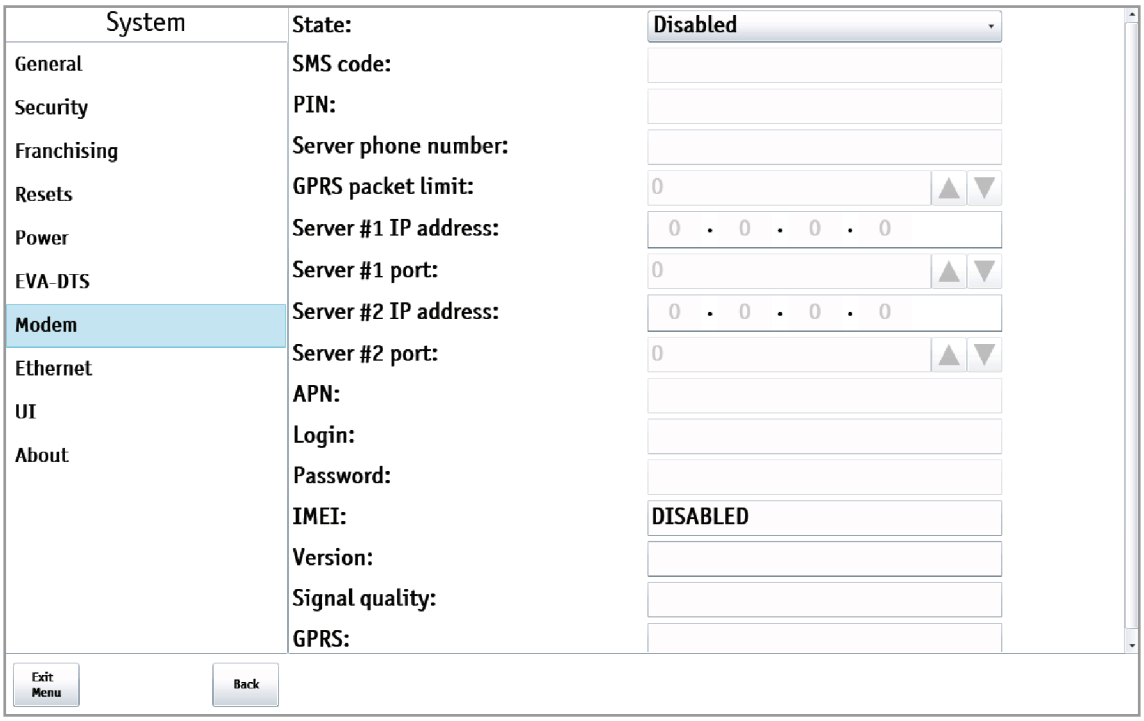

Fig.9.7 - System (Modem)

NAME	DESCRIPTION	VALUE
State	**Enable** - allows modem usage. When enabled, all resettable counters will be reset after the cash-box or stacker removing **Disable** - operating without modem	Disabled Enabled
SMS code	Enter an 8 digit code, using which the server can carry out initial connection through SMS (manual connection). In case of manual connection of the Machine the server asks for access code. The entered code must correspond with the code indicated in this menu item, otherwise connection will not be established	Enter an 8 character code (strict)
PIN	Enter SIM's PIN code. This parameter does not change SIM's PIN code. If the SIM's PIN code is activated, you must enter the PIN code here, which corresponds with the SIM's PIN code. It is not recommended to use PIN code, because in case of wrong PIN entry the SIM can be blocked	Enter an 8 character code (strict)
Server phone number	Sets the telephone number. Which will be dialled to establish server connec-tion. To make this parameter effective you must turn on CLI for the Machine's SIM card	Enter up to 16 characters
GPRS packet limit	Allows you to limit the amount of information transmitted in a single package (the decrease leads to a strong slowdown in online monitoring, but allows more likely to transmit data in unstable communication)	1 - 255

NAME	DESCRIPTION	VALUE
Server #1 IP address	Enter IP address for server to which the Machine would connect. For the first manual connection to the server (via SMS) this parameter is set automatically by the server	Enter IP address
Server #1 port	Enter port for server to which the Machine would connect. For the first manual connection to the server (via SMS) this parameter is set automatically by the server	Enter port
Server #2 IP address	Enter IP address of the server to which the Machine would connect in case of inability to connect to server 1. If the server does not have reserve line the second address must be the same as the first one. When making first manual connection to the server this parameter is set automatically by the server	Enter IP address
Server #2 port	Enter port of the server to which the Machine would connect in case of inability to connect to server 1. If the server does not have reserve line the second address must be the same as the first one. When making first manual connection to the server this parameter is set automatically by the server	Enter port
APN	Sets the access point, which will be used to establish internet connection. The value of this parameter can be known from the mobile operator	Enter up to 40 characters
Login	Sets login for connection to the mobile provider's access point. You can ask for this parameter from your provider	Enter up to 20 characters
Password	Sets the password to connect to the access point of your mobile provider. You can know the value for this parameter from your operator	Enter up to 20 characters
IMEI	Shows IMEI (id) of the connected modem. According to IMEI the machine can be identification on the server	
Version	Shows the software version of the modem and the type of the modem	
Signal quality	Quality of the received signal	
GPRS	Connected or not to GPRS	

Note: Settings are relevant only when using a modem (option) in the machine.

9.1.1.8 Ethernet

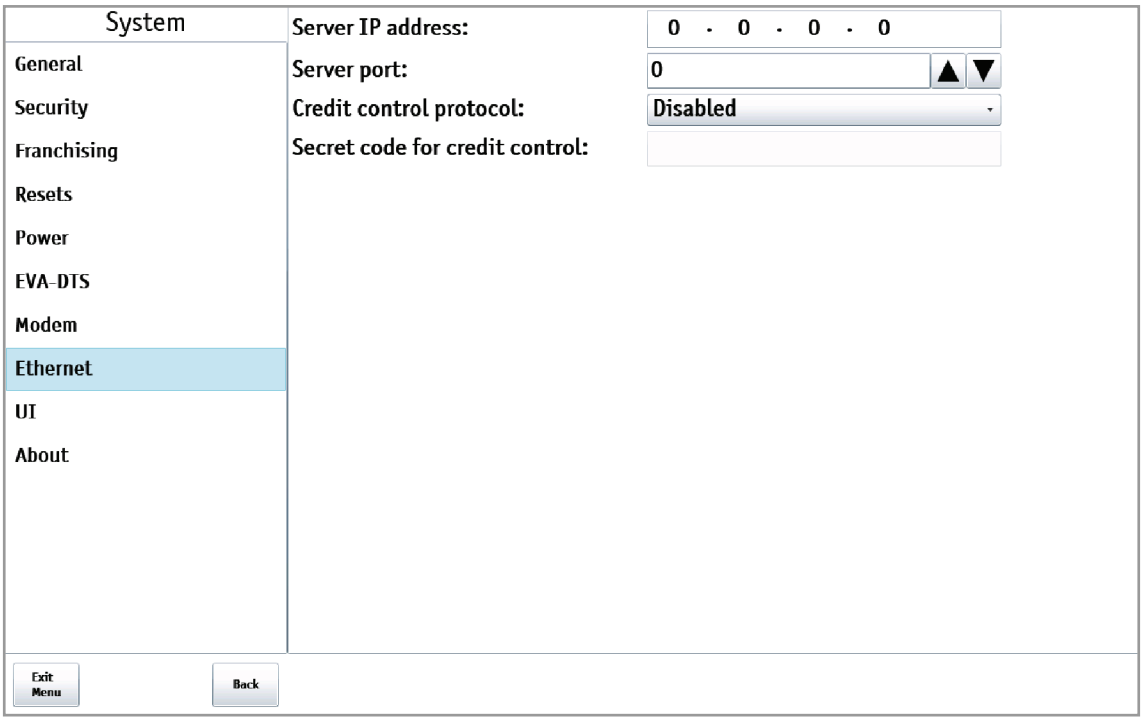

Fig.9.8 - System (Ethernet)

NAME	DESCRIPTION	VALUE
Server IP address	Here we set the Server's IP address which is used to handle card data, saving balance information on the server (not on the card). When such card is swiped (and when it is recharged or when used for purchases) the Machine connects to the given server and asks for permission to perform the action (or will check current balance). This address can be local (for the Machine) or external. If we don't use card system with balance information on the server, we do not set this field	4 numbers 0...255
Server port	Here we set the Server's port which is used to handle card data, saving balance information on the server (not on the card)	
Credit control protocol	Permits / forbids the credit control protocol, which may be used for, e.g., the integration of the vending machine to the filling stations POS machine software. • **Enabled** – enables the protocol, permitting accruing the credit / free-giving out the product via Ethernet.	Disabled Enabled
Secret code for credit control	Sets the secret key, by using which the software for accruing the credit via Ethernet is authorized. If the credit control protocol is enabled in the "Протокол контроля кредита" (Credit control protocol) setting, then this setting should coincide with the filling station POS machine software (if this software accrues the credit rather than controls the sales via the virtual reader). If the protocol is disabled in the (Credit control protocol) setting (or if the POS machine software is not using the possibility to accrue the credit), this setting is meaningless	Input code

Note: Ethernet is used for data exchange between the vending machine Controller (Main Board) and the Monoblock. Changing any settings may bring the vending machine into workless condition!

9.1.1.9 UI

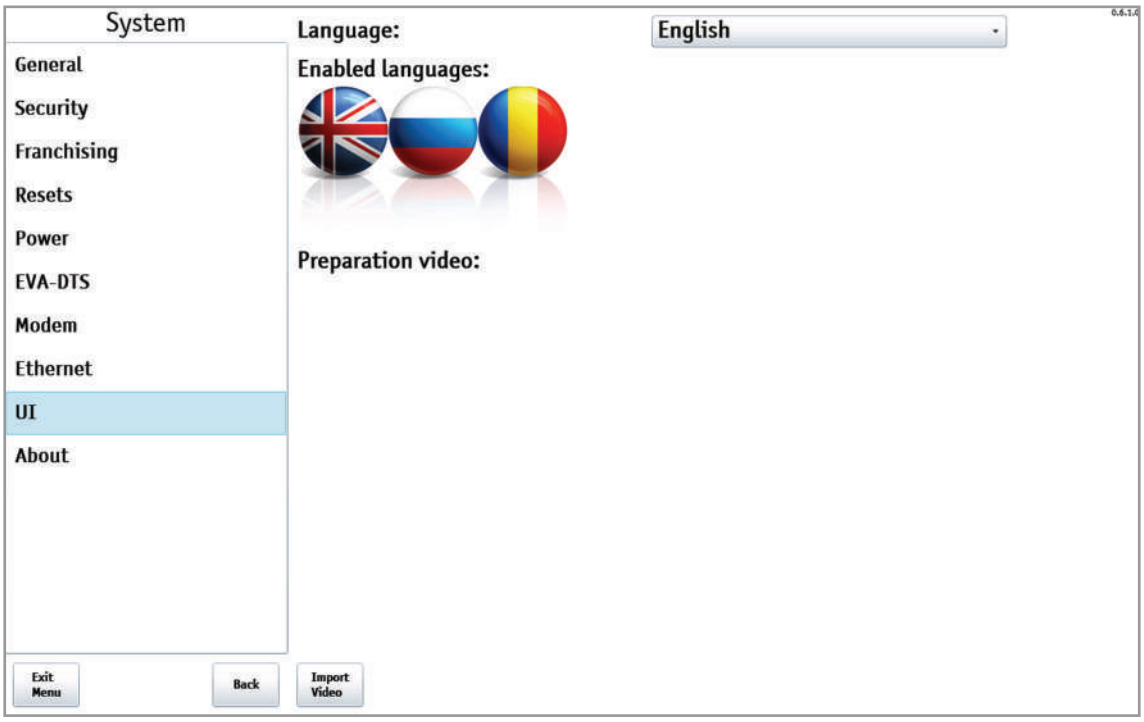

Fig.9.9 - System (UI)

NAME	DESCRIPTION	VALUE
Language	Shows the language, to which the vending machine automatically switches every time it returns to the initial screen. The customer can change the language, but after the vending machine returns to the initial screen, the language will change back to this setting	Language selection
Enabled languages	The setting determines the list of user available languages. However, it's impossible to disable the default language.	A list of available languages (icons with country flags)
Preparation video	The setting defines a list of available video files, which may be selected for playing on the vending machine screen during the making of a drink.	A list of available video files
Import Video (touch button)	The selection of the video file that will be played on the vending machine screen during the making of a drink.	

9.1.1.9.1 Loading video to vending machine

1. Create a folder named “NeroTouch” on a USB flash drive, formatted to support the FAT file system, and copy video files to this folder (**in WMV and MP4 format, other file formats are not supported by the vending machine software**).

2. Connect the USB flash drive to the USB-port (USB-PC), located on the inner surface of the vending machine door (see fig. 5.2 pos. 10 and fig. 6.2).

3.Enter the menu technician into the **System - UI** section (see the figure above) and press the **Import video**.

4. Choose a video from the list (see fig. 9.9.1) and press the **Confirm** button.

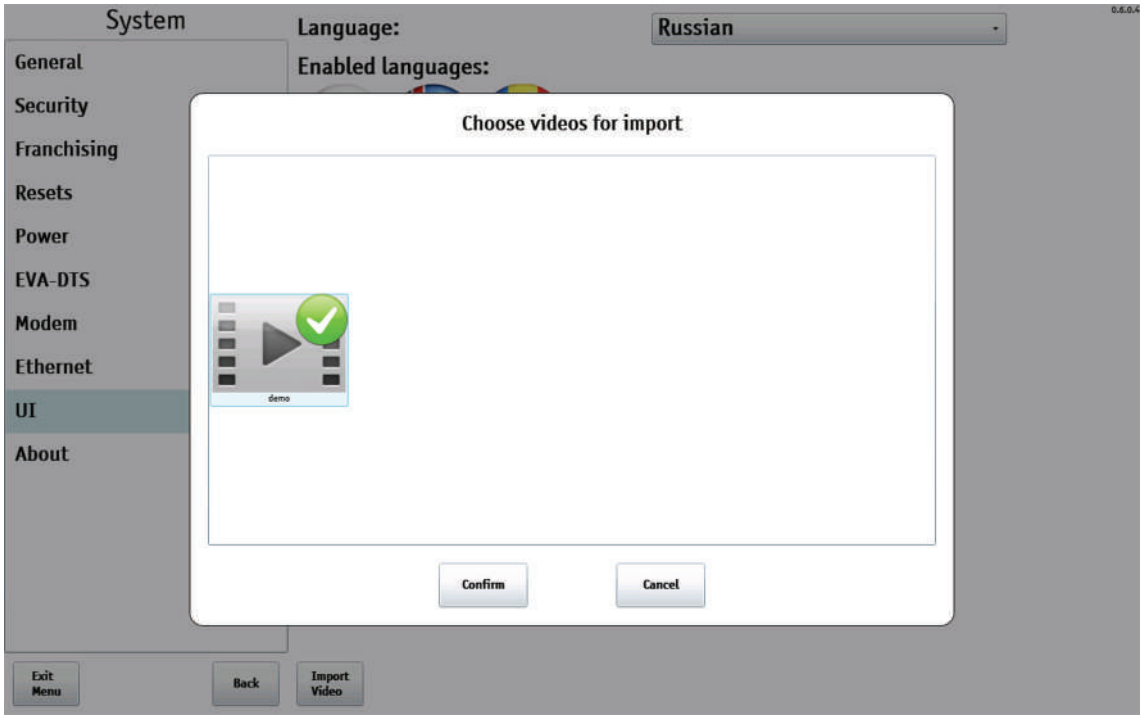

Fig.9.9.1 - System (UI) - Import Video

5. Then in the opened message box press the **OK** button.

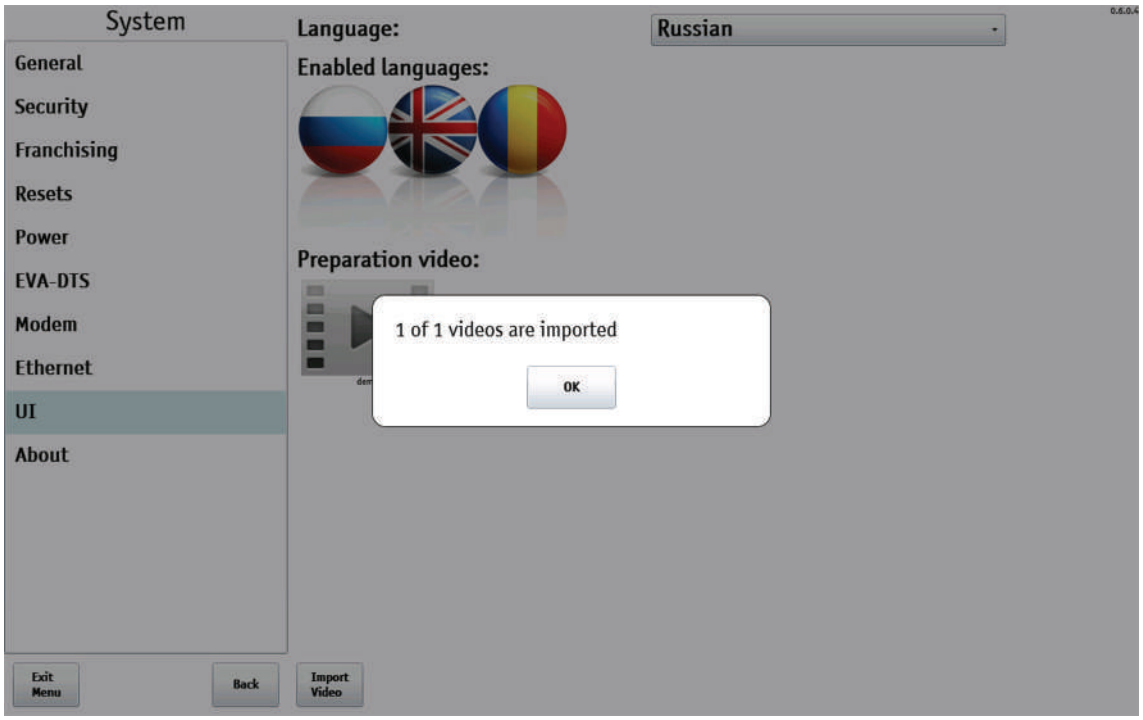

Fig.9.9.2 - System (UI) - Import Video

6. Select the video file that will be played during the making of the drink.

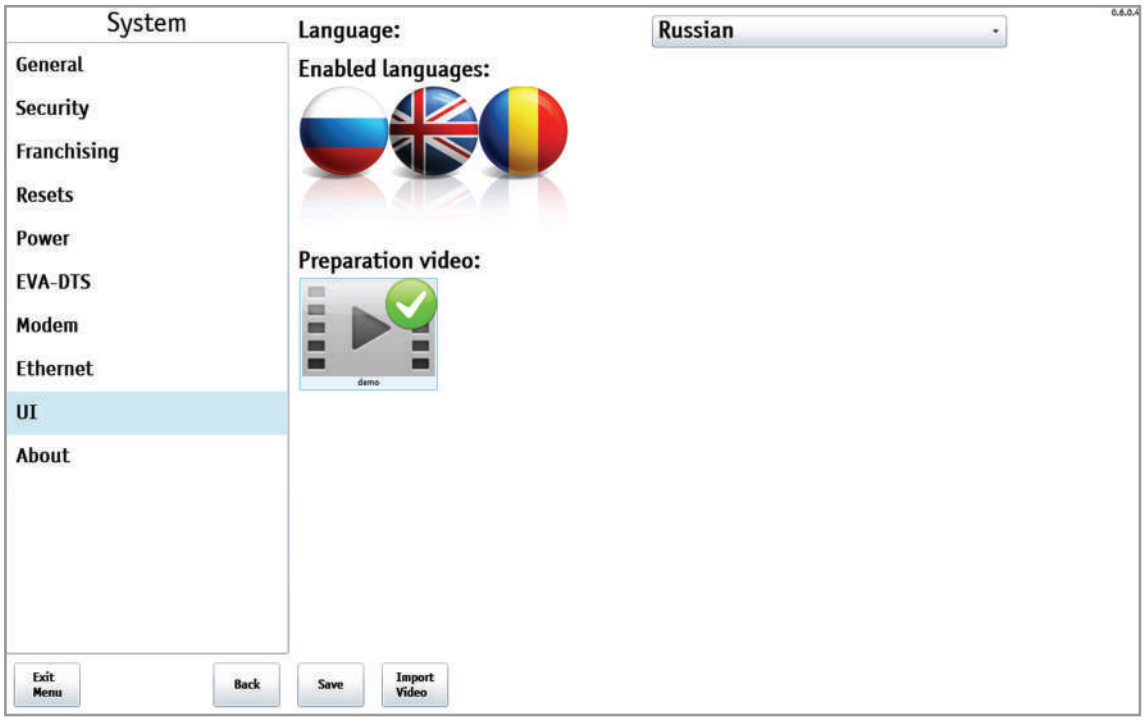

Fig.9.9.3 - System (UI) - Import Video

ATTENTION!
Video files other than WMV and MP4 format, will not be played!
If during the video file import it will turn out that such file is already loaded into the vending machine, it cannot be loaded again!

9.1.1.10 About

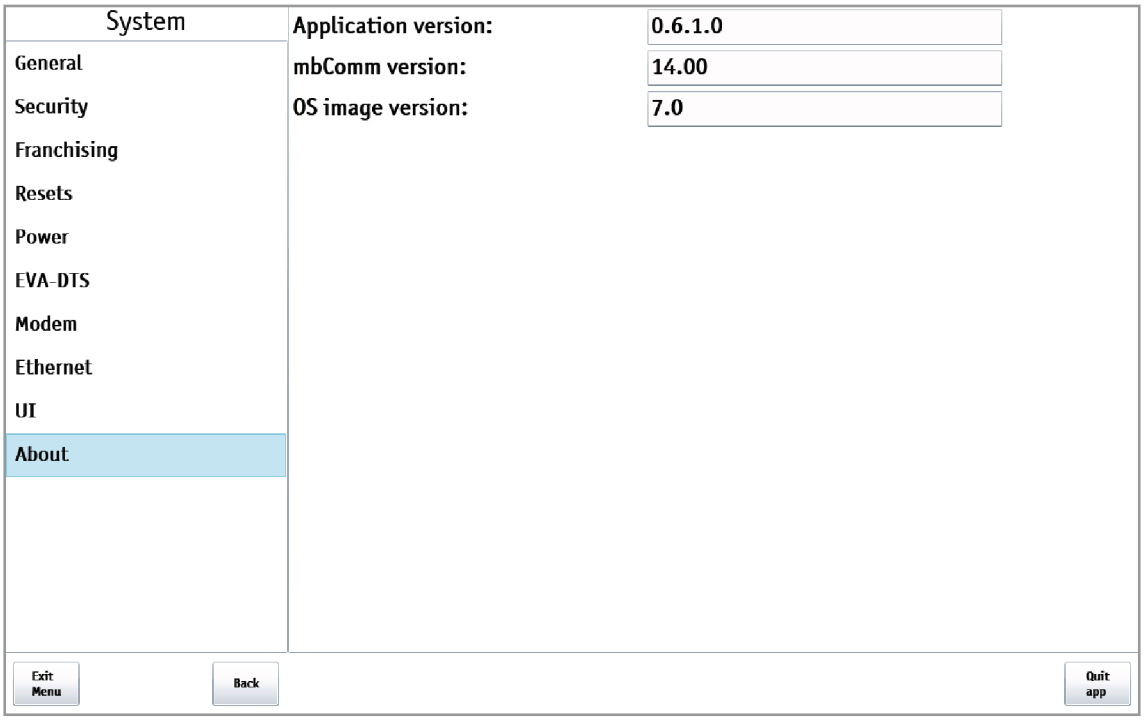

Fig.9.10 - System (About)

NAME	DESCRIPTION
Application version	Software version of the machine
mbComm version	mbComm version (the application component, responsible for communication with the Controller Board (Main Board))
OC image version	Version of the installed OS

9.1.2 Errors

Reviewing errors, registered by the vending machine during the operation: type of equipment, where the error (fault) occurred, time and date of the last error detection, the number of faults, the error actuality.

The actual errors are highlighted in red, not actual - in green.

To reset the actual errors touch the button **Reset Errors** at the bottom of the page.

To set certain errors, touch the button **Setup Errors**, at the bottom of the page(see section 9.1.2.1).

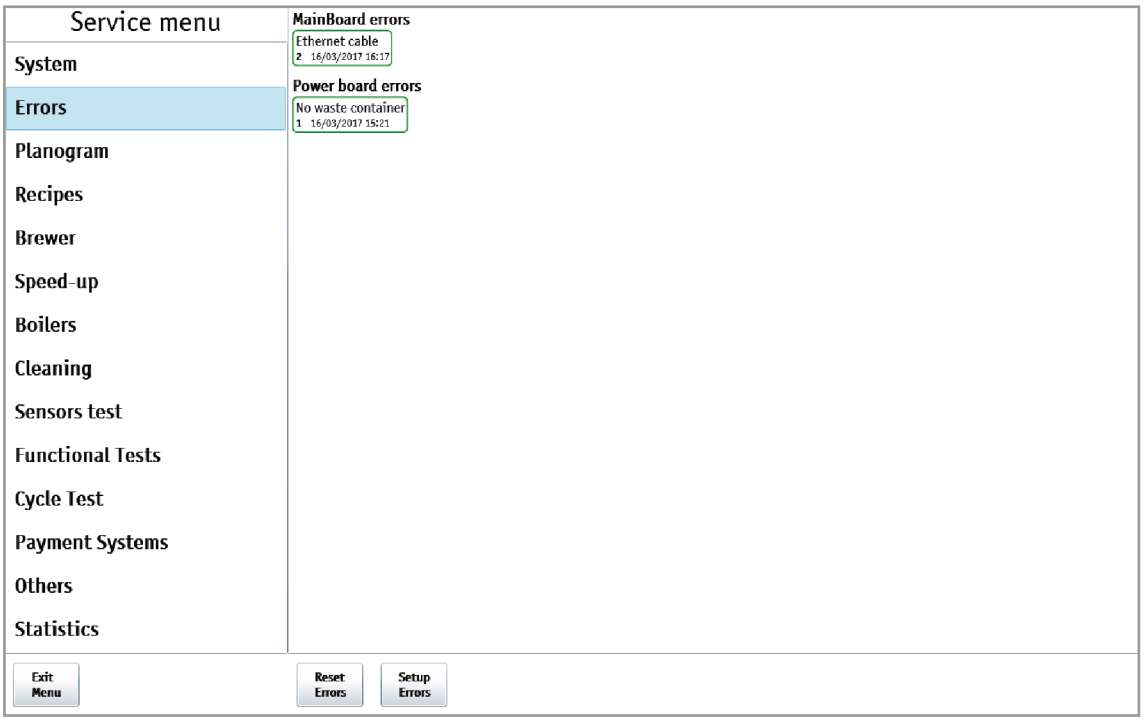

Fig.9.11.1 - Errors (Viewing errors)

9.1.2.1 Setup Errors

To return to the page with errors (see fig. 9.11.1) touch the **View errors** button at the bottom of the page.

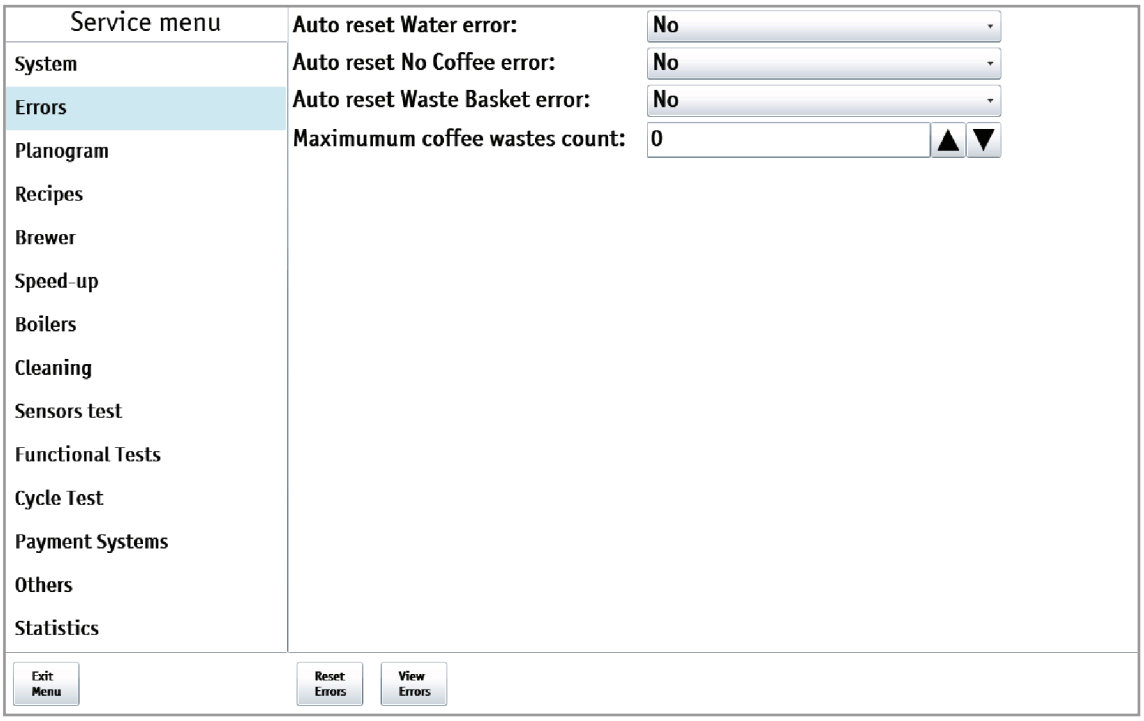

Fig.9.11.2 - Errors (Setup errors)

NAME	DESCRIPTION	VALUE
Auto reset Water error	**YES** – reset water input errors automatically when the machine is turned ON (resetting of the main board)	No Yes
Auto reset No Coffee error	**YES** – reset No coffee error automatically when the machine is turned ON (resetting of the main board)	No Yes
Auto reset Waste Basket error	**YES** – reset Basket errors automatically when the machine is turned ON (resetting of the main board)	No Yes
Maximum coffee wastes count	The setting makes sense for vending machines, making ground coffee (and makes no sense for INSTANT vending machines). This setting permits/forbids stopping making coffee after the coffee waste container is overfilled. Because there are no overfill sensors, the vending machine simply counts the number of portions made. A number of wastes that can fit into the container is set (recommended value – 200). When exceeding the number of portions made the vending machine generates an error and stops making coffee. The error can be reset only by removing the waste container for a protracted period of time (several seconds) after powering the vending machine off. By setting 0 the vending machine switches the waste container overfill control, and the vending machine never stops when the waste container is overfilled.	Enter number

9.1.3 Planogram

To edit the drink touch its image in the planogram (see fig. 9.12a and 9.12b). Then the drink setting page opens (see fig. 9.12.1).

For loading the drink image into the vending machine press the **Imjport images -2** button.

The buttons **(1)** are used for changing between the planogram layouts. Furthermore when in the vending mode the layout is chosen automatically in accordance with the index of the last permitted product: if the index is more than 10, then the layout 16 is used, otherwise the layout 10 (see fig. 9.12b).

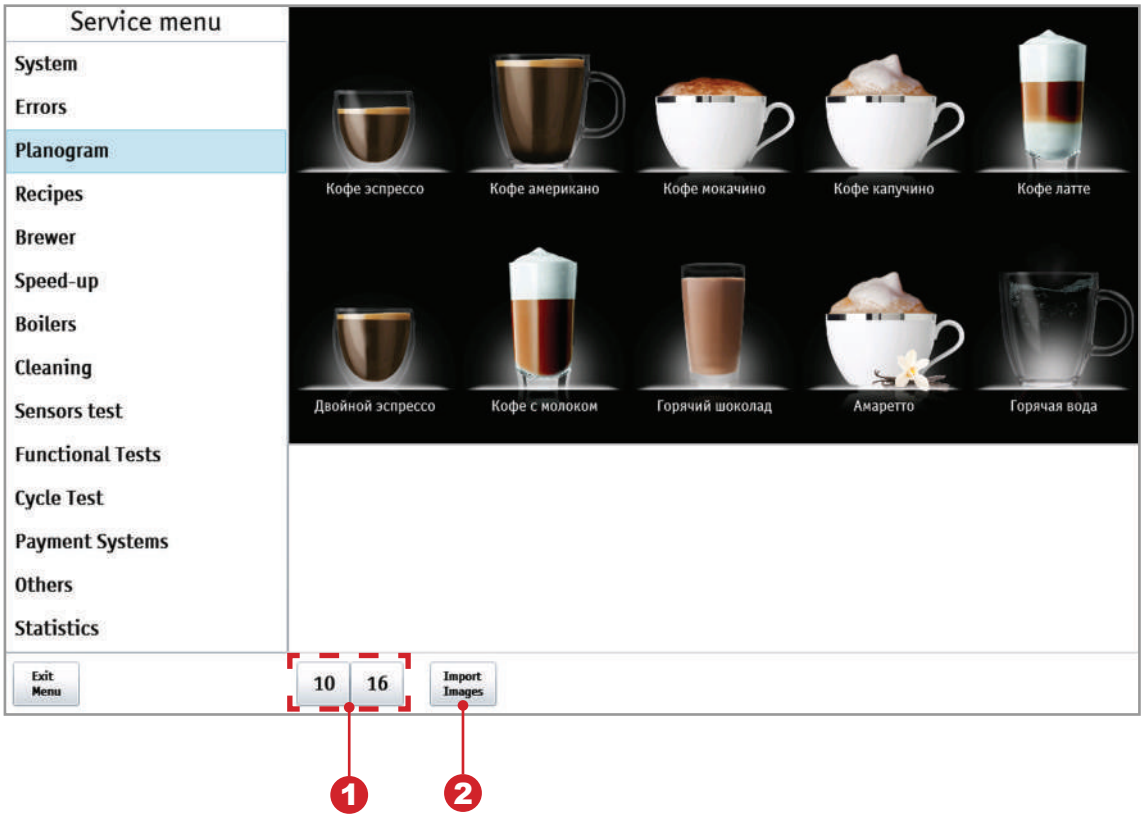

Fig.9.12a - Planogram (10)

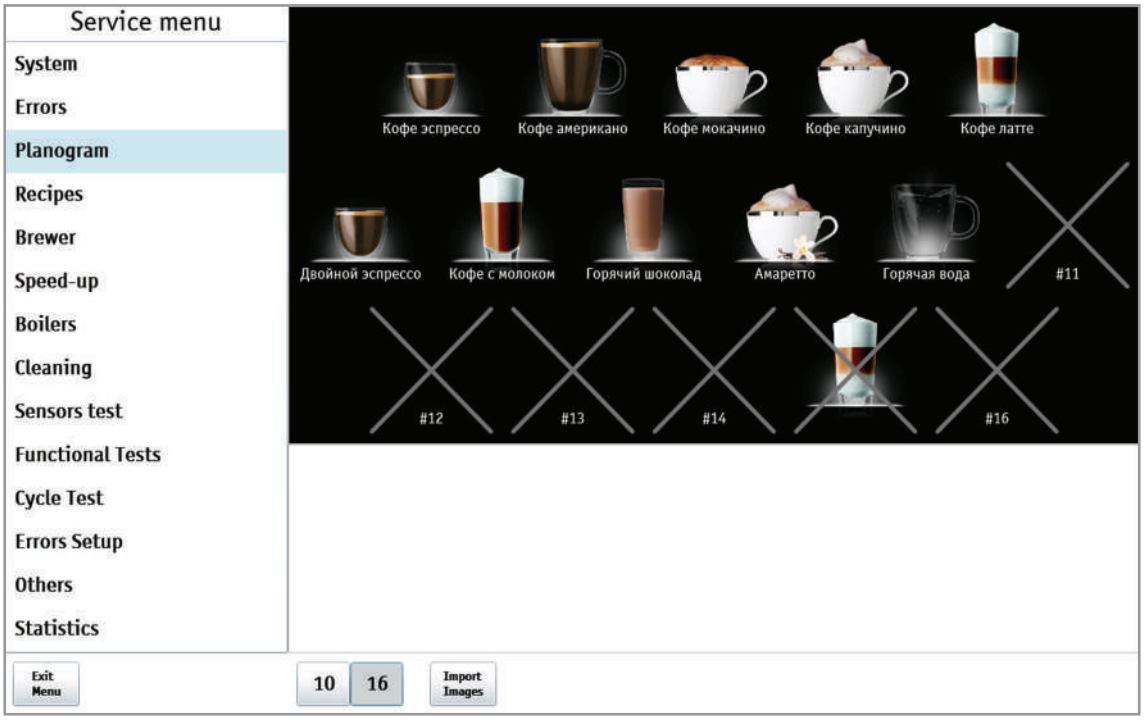

Fig. 9.12b - Planogram (16)

9.1.3.1 Planogram settings

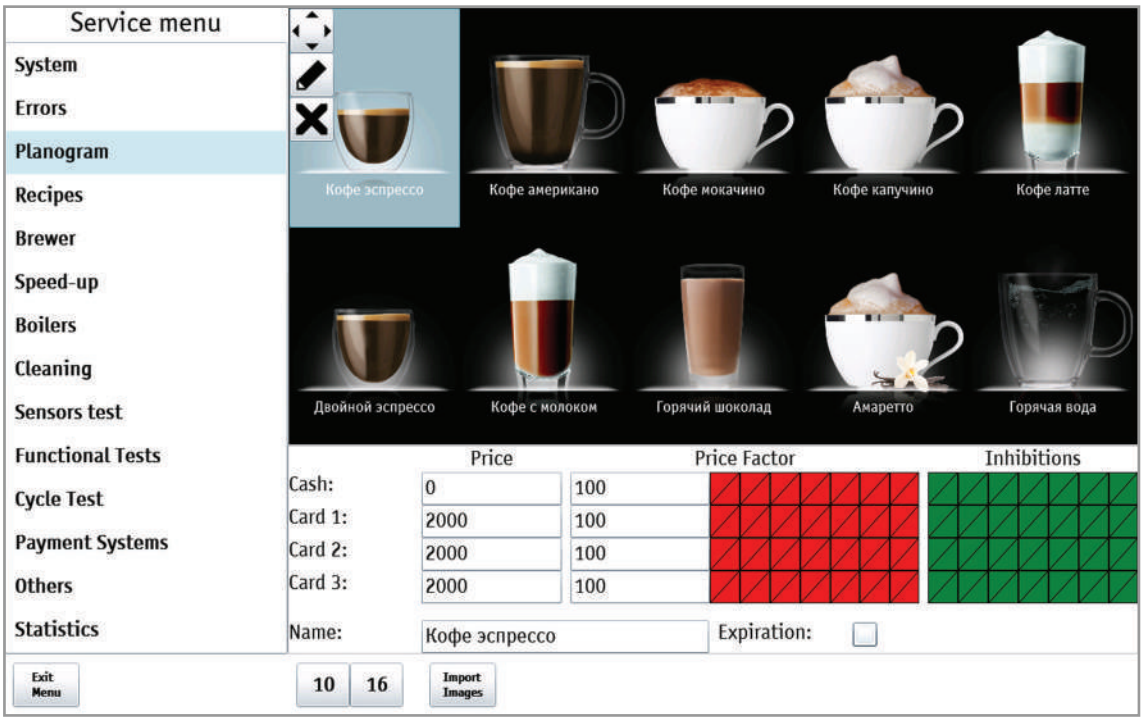

Fig.9.12.1 - Planogram (Settings)

NAME	DESCRIPTION	VALUE
Cash	Setting the cost of a drink when buying for cash	Enter number
Card 1...3	Setting the cost of a drink when buying a card 1..3	Enter number
Name	Here you enter the name of the drink, which will be displayed in sales mode on the screen	Enter the name of the drink
Expiration	If checked it's possible to set the selected drink expiration time and date. When the expiration time and date are reached, the drink vending is stopped.	Enter the time and date

To set the discount/surcharge and prohibitions, touch the string opposite to the concerned price **Cash, Card 1, Card 2, Card 3**. Then the possibility of choosing the day of week and time zone appears.

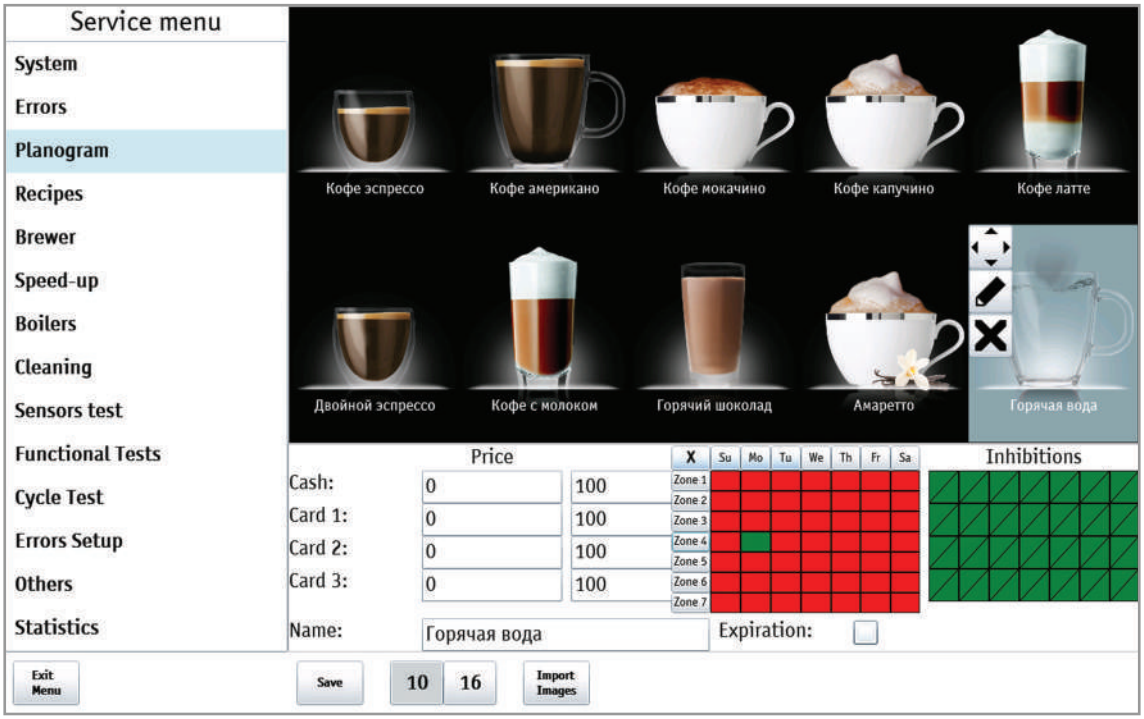

Fig.9.12.2 - Planogram (Settings)

NAME	DESCRIPTION	VALUE
Price Factor	The discount or surcharge setting from the specified selling price in the settings (**Cash, Card 1...3**) in percent when buying for cash/server credit (by card 1...3). To set the time and period of discount/surcharge validity touch the field with the required time zone (Zone 1...7) for the required day of the week. The time zones validity start and end time is set in the (Configurator – see the manual at the website www.unicum.ru) program. Upon choosing the field is turned green -which means that the setting is valid on the given day of the week in the interval, specified by the time zone.	1...100% (discount) 101...200% (surcharge)
Inhibitions	Setting the drink vending prohibition when buying for cash/server credit (by card 1..3). To set the time and period of prohibition touch the field with the required time zone (Zone 1...7) for the required day of the week. The time zones validity start and end time is set in the (Configurator – see the manual at the website www.unicum.ru) program. Upon choosing the field is turned red -which means that the drink vending prohibition is valid on the given day of the week in the interval, specified by the time zone.	

9.1.3.2 Setting buttons

1. After selecting in the drink planogram, the tuning buttons appear (see fig. 9.12.3).

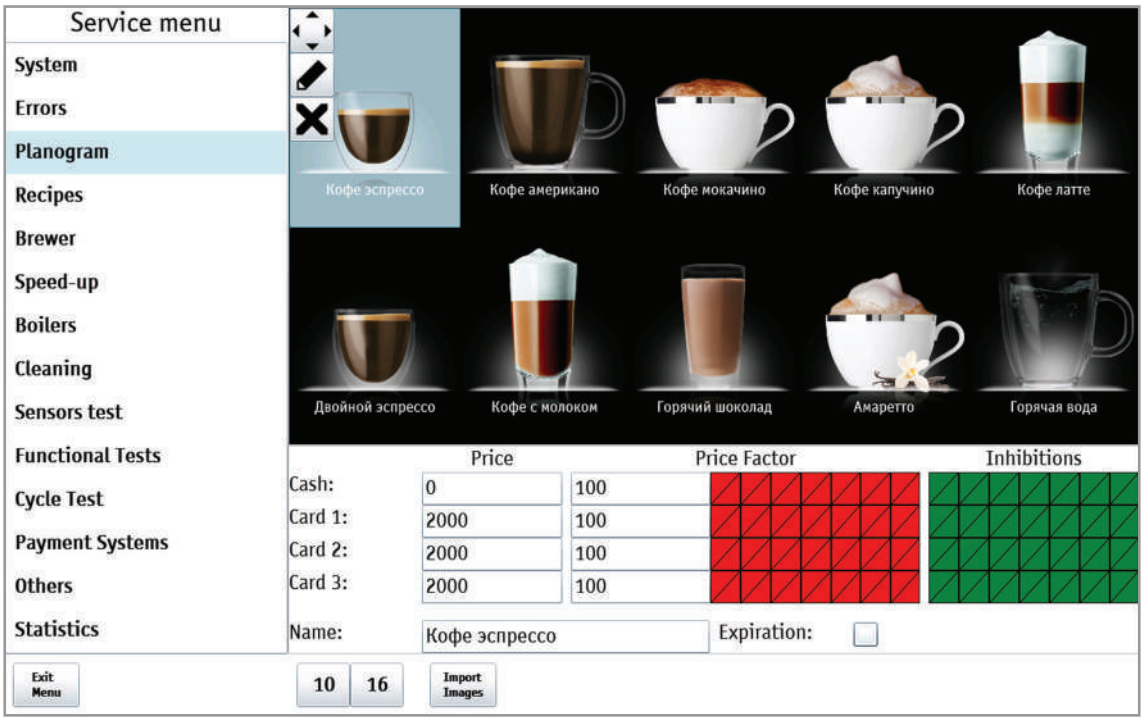

Fig.9.12.3 - Planogram (Setting buttons)

2. The tuning buttons have the following purpose (see fig. 9.12.4).

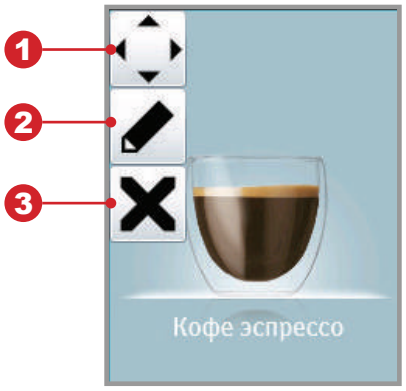

1. Movement

2. Image adjustment

3. Prohibition/permission (in the case of prohibition the drink in the planogram is crossed out, see fig. 9.12b).

Fig.9.12.4 - Setting buttons

An example of the drink image adjustment is shown below

1. In the planogram select the drink, which image you want to edit (see fig. 9.12.3).
2. Then touch the button (2-pencil) (see fig. 9.12.3 and 9.12.4).

3.The page for choosing the drink image setting algorithm will appear: automatic or manual.

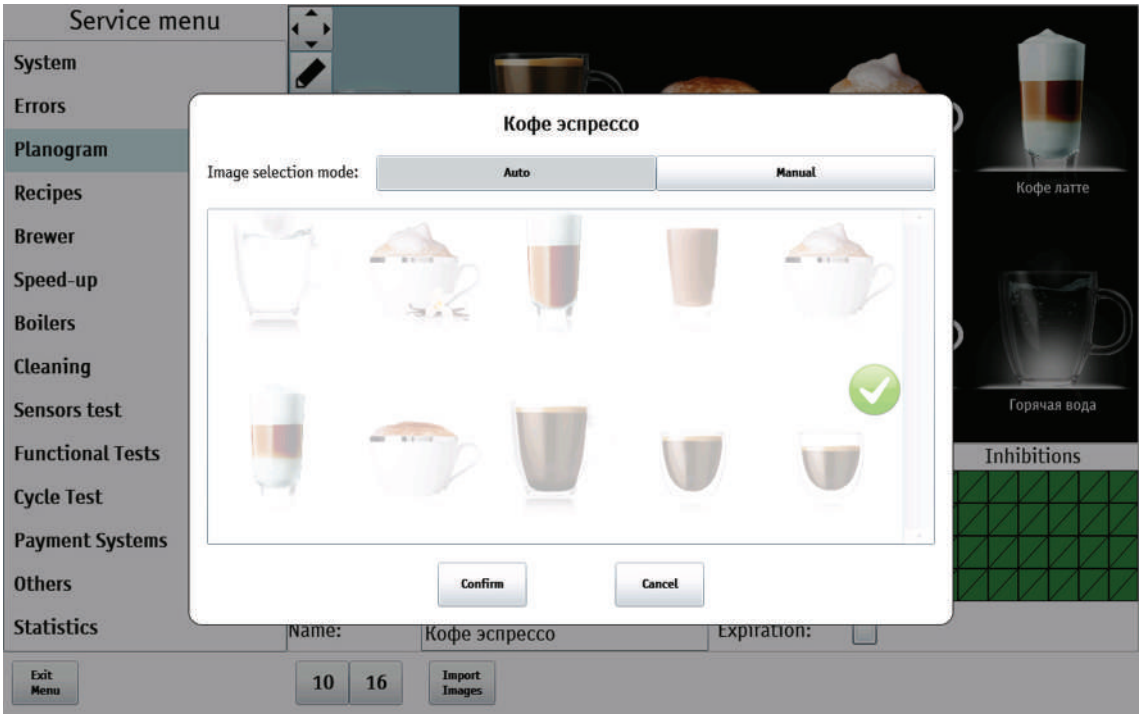

Fig.9.12.5 - Planogram (Beverage image)

4. When choosing the manual mode a list with images becomes available, permitting choosing the required image. After choosing press the **Confirm** button.

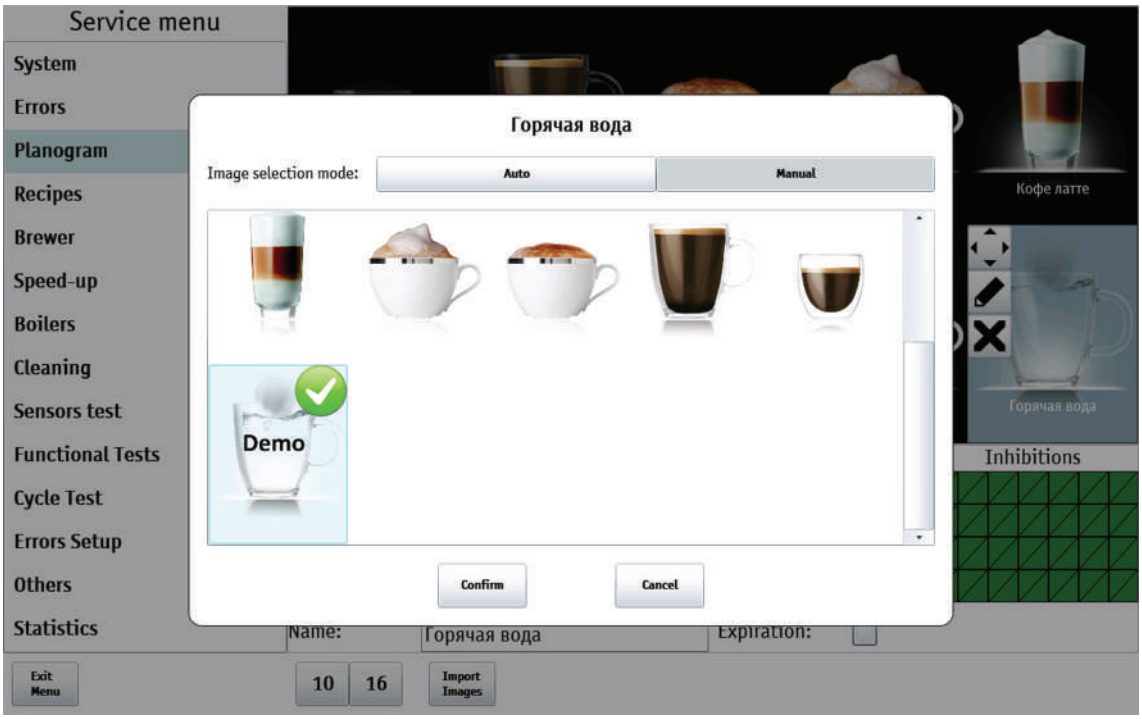

Fig.9.12.6 - Planogram (Beverage image)

5. Now the selected image for the drink will be displayed in the service menu planogram and in the vending menu.

9.1.3.3 Loading image to vending machine

To load the images to the vending machine base:

1. Create a folder named “Nero Touch” on a USB flash drive, formatted to support the FAT file system, and copy image files. To create own images use the template:
https://uonline.unicum.ru/ef/tools/NeroTouch/template.png

The template specifies:
- format (PNG);
- transparent background;
- backlighting under the drinks (the backlight is white so it’s not visible on white background);
- drink vertical position (specified by the back lighting under the drink);
- size (504 x 660 dots/pixels);
- resolution (96 dpi, dots per inch).

An example of the finished image: **https://uonline.unicum.ru/ef/tools/NeroTouch/sample.png**

Note: The images should be saved in PNG format, they can have an “alpha channel” (transparent, semitransparent, opaque zones).

2. Connect the USB flash drive to the USB-port (USB-PC), located on the inner surface of the vending machine door (see fig. 5.2 pos. 10 and fig. 6.2).
3. Enter the Service menu into the **Planogram** section (see the figure above) and press the Import images.
4. Choose an image from the list (see fig. 9.12.7) and press the **Confirm** button.

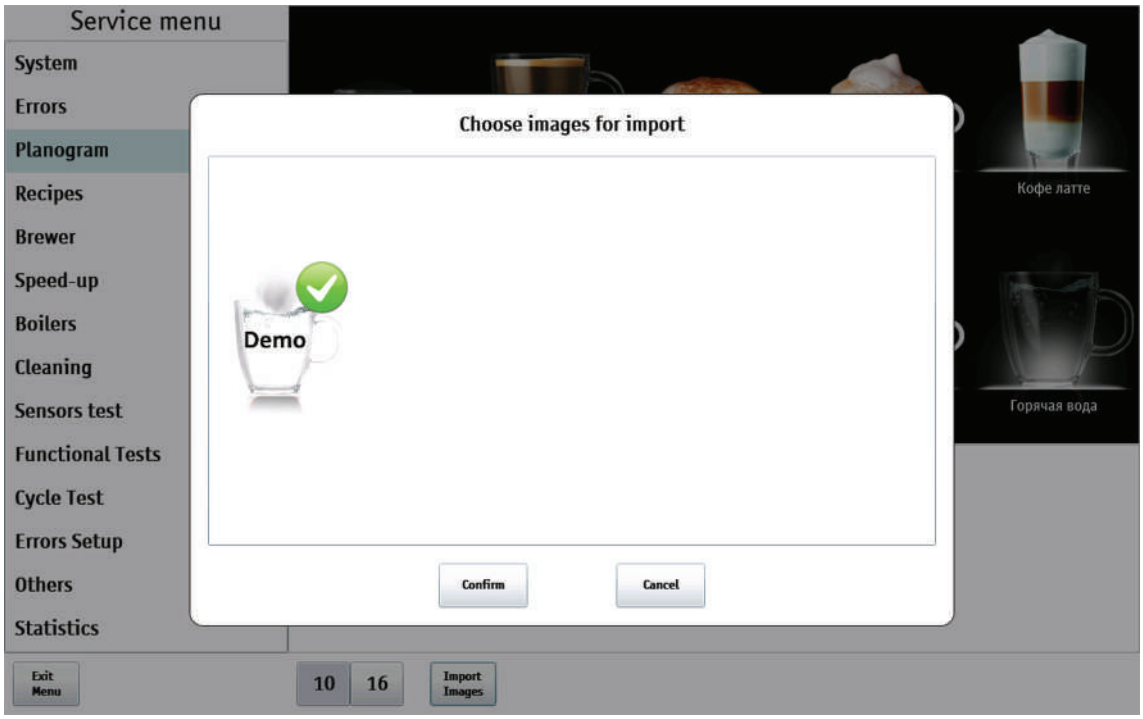

Fig.9.12.7 - Planogram (Import image)

5. Then in the opened message box press the “OK” button.

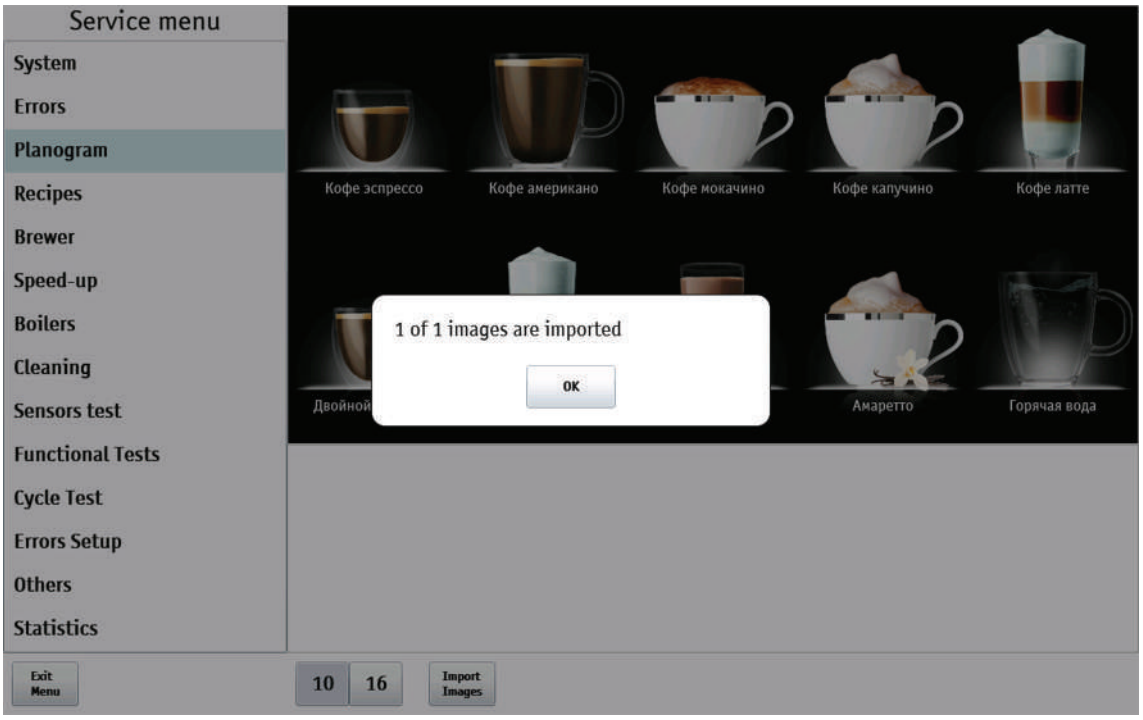

Fig.9.13.2 - Planogram (Import image)

9.1.4 Recipes

Here drink recipes are specified, which may consist of several steps (ingredients). Each recipe may have a different number of ingredients (up to 4). The sequence of the ingredients in the recipe corresponds to the sequence of the drink making**.**

To adjust the recipe:

1. Select a drink **(1)** which recipe you want to adjust, in the left part of the page.
2. Then choose an ingredient, added into the drink, from a drop-down list of ingredients **(2)**.
3. By using buttons **(3)** set the required amount of the selected ingredient (the ▲ button increases the amount of the ingredient, and the ▼button decreases the amount). Set in tenths of a second of the giving out motor spin time. For coffee drinks, it depends on the mode, selected in the **Brewer** section, the **Adjustable coffee dose** setting**.**

If set to **NO**, this parameter makes no difference. If set to **(7..9)**, then for the values from 0 to 70 the dosage of 7 g of ground coffee will be grinding. For the values from 70 to 90 the dosage of coffee in tenths of a gram is specified here. For the values above 90, the dosage of 9 g of coffee will be ground.

If it has the **VARIO-BREWER** installed, then in this setting the values from 70 to 150, which is a dosage of coffee in tenths of a gram, are specified here (all that is less than 70 means 7 g, and all that is above 150 means 15 g).

4. By using the buttons **(4)** set the amount of water added to the drink:

- **for hot water** - set in the milliliter;
- **for fresh milk -** here the time in tenths of a second, during which the vending machine supplies steam to the cappuccinatore, is set.

5. The button **(5)** is used for adding an ingredient in the drink recipe **Ingredient** field.

Note: To make the ingredient addition to a drink visual, the addition of another ingredient will be shown as the new sector of the cup, which color will correspond to the added ingredient.

6. The button **(6)** is used for removing an ingredient from the drink recipe **Ingredient** field.

Note: The button appears when there's more than one ingredient in the drink recipe, otherwise the button will not show (see fig. 9.14.2).

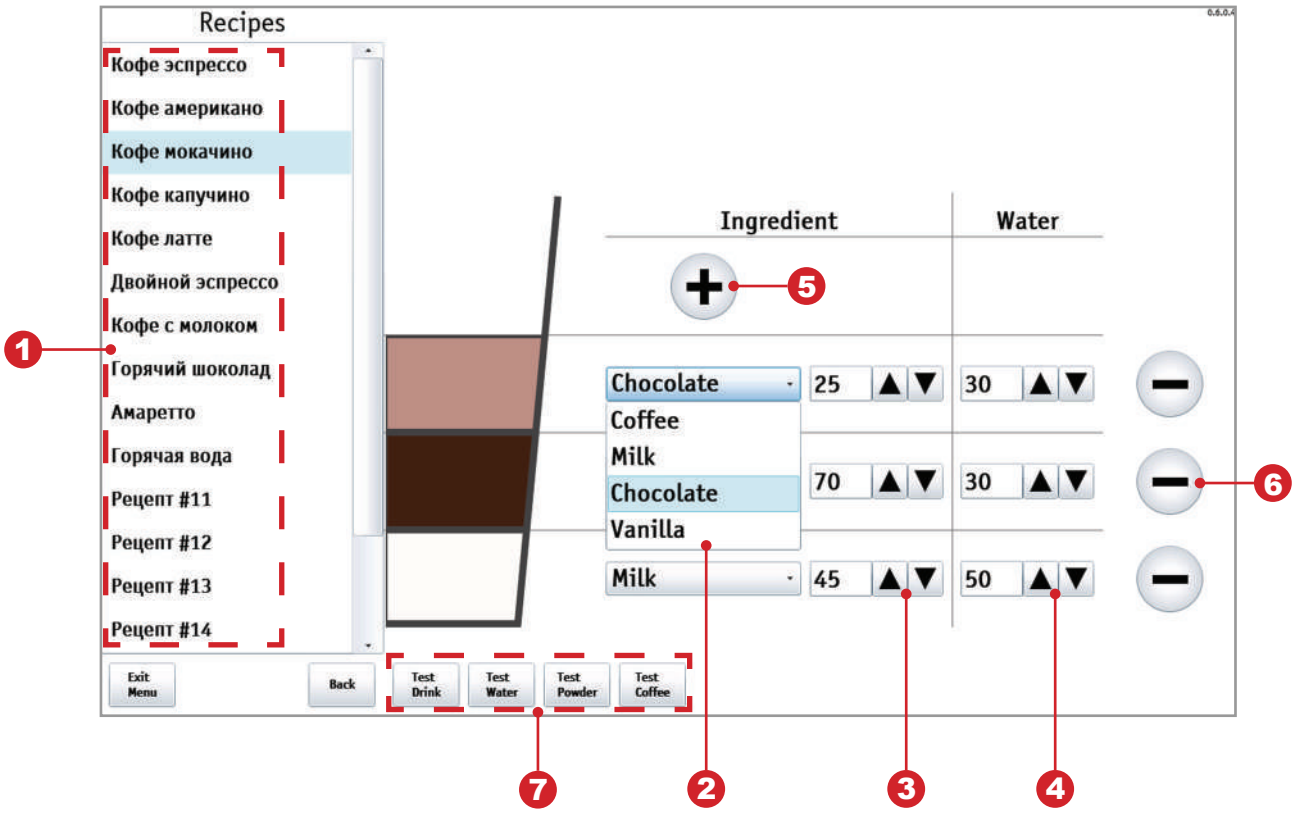

Fig.9.14.1 - Recipes

Buttons (7):

1. **Test Drink** - The machine performs operations for preparing the selected beverage.
2. **Test Water** - The machine performs operations for preparing the selected beverage without adding ingredients.
3. **Test Powder** -The machine performs operations for preparing the selected beverage without adding water. This test allows removing mixer weighed amount of powder, which is used for the preparation of a beverage.
4. **Test Coffee** - The machine performs operations for preparing the selected beverage without adding water and soluble ingredients.

When there's more than one ingredient in the recipe, the button **(1)** appears on the screen for the ingredient removal (see fig. 9.14.2).

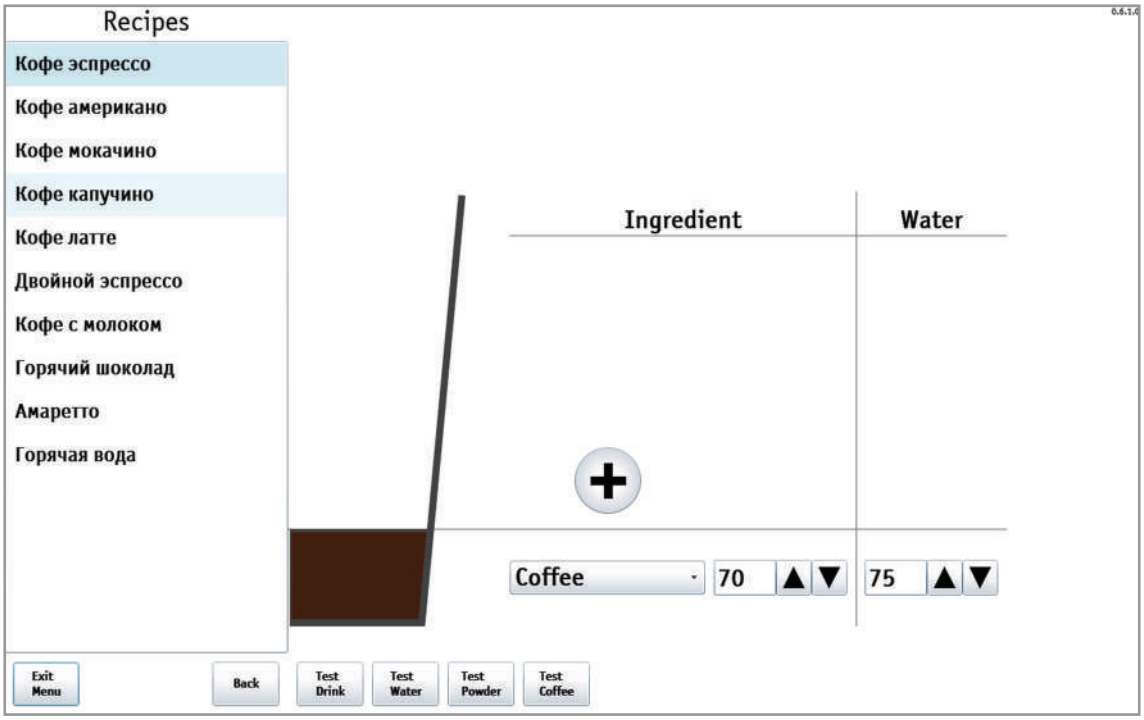

Fig.9.14.2 - Recipes

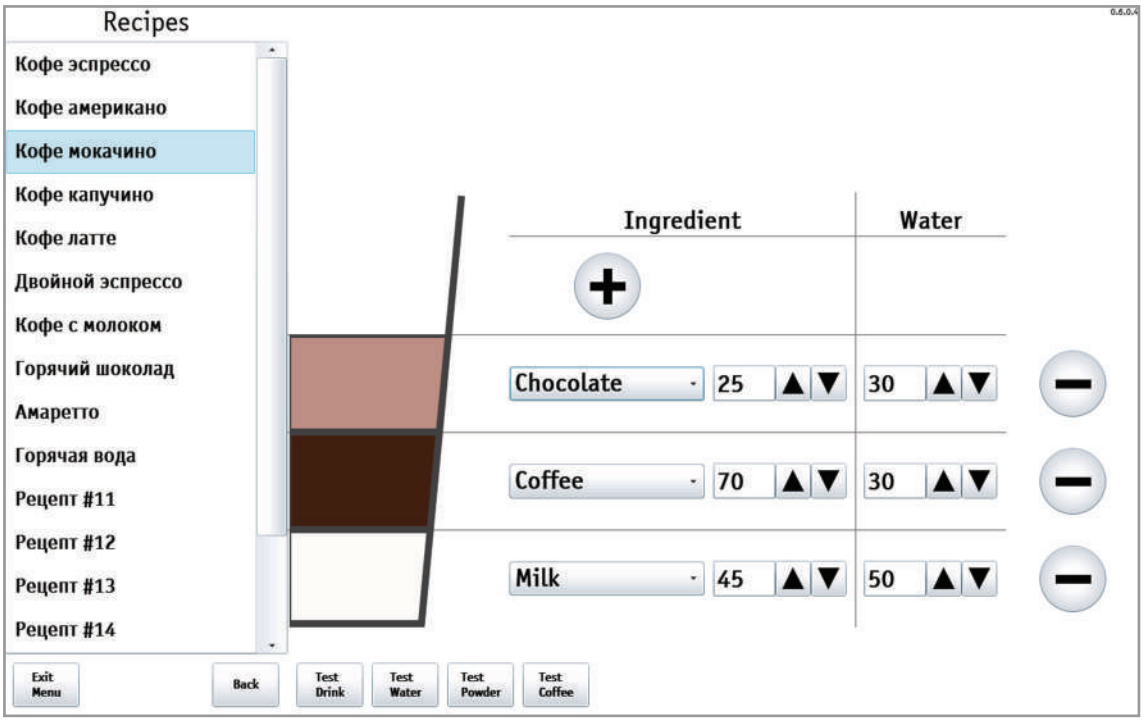

Fig.9.14.3 - Recipes

9.1.5 Brewer

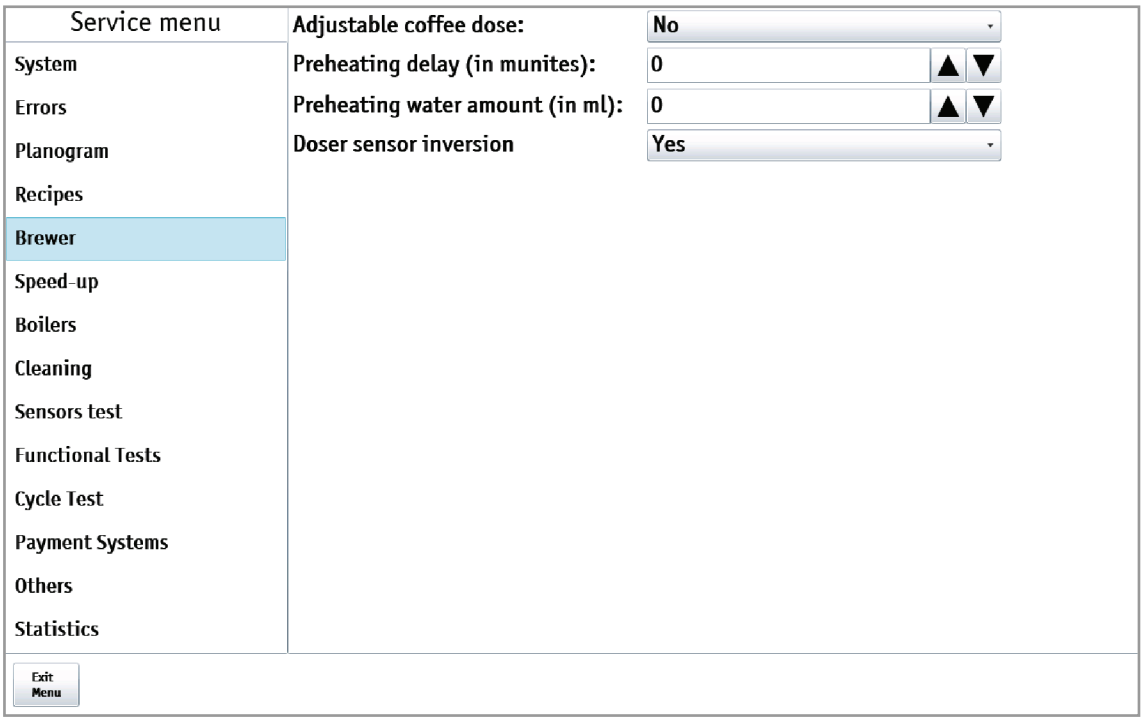

Fig.9.15 - Brewer

NAME	DESCRIPTION	VALUE
Adjustable coffee dose	The setting is meaningless for instant coffee vending machines (INSTANT). Specifies the coffee group type. The value **(NO)** prohibits the changing of the coffee powder dosage in recipes (only one portion will always be ground, set by the dosing unit setting). The value **(YES) (7..9)** activates the mode, where the ground portion can be programmed in a range from 7 to 9 g (it's programmed in tenths of a gram by selecting the number in a range from 70 to 90). **ATTENTION!** Before activating this mode make sure that the used group can brew coffee from 9 g of coffee powder (in order to find out how to switch the group to the 9 g mode, consult the service center). **ATTENTION!** Before activating this mode, adjust the dosing unit in such a way that one coffee portion will be 7 g sharp (if the dosing unit permits, e.g., adjusting the values to 6.8 and 7.2, select 6.8 g) for more information contact the service center. The value of **(VARIO-BREWER)** (7..15) permits programming the coffee powder dosage in the range from 7 to 15 g (by the number from 70 to 150). But for doing so the vending machine should have the special version of the coffee group with motorized changing of the brewing camera volume, where the coffee brewing is realized (otherwise when selecting this option the vending machine will show the vario-group error and will stop making coffee based drinks). **ATTENTION!** Before activating this mode, adjust the dosing unit in such a way that one coffee portion will be 7 g sharp (if the dosing unit permits, e.g., adjusting the values to 6.8 and 7.2, select 6.8 g) for more information contact the service center.	No Yes (7..9) Vario-brewer (7..15)

NAME	DESCRIPTION	VALUE
Preheating delay (in minutes)	Water flowing through the espresso group for brewing camera preheating before making coffee. Preheating delay setting. If from the moment of the last brewing passed more time, than specified, the specified volume of hot water flowing occurs before the brewing. If passed less time, than the volume of hot water flowing is decreased proportionally.	Enter number 0...240 (min.)
Preheating water amount (in ml)	Quantity of water for preheating	Enter number 0...30 (ml)
Doser sensor inversion	**Yes** – if the dosing apparatus's micro switch is connected to open contacts **No** – if the dosing apparatus's micro switch is connected to closed contacts If the given parameter is set incorrectly you will not get any coffee	No Yes

9.1.6 Sped-up

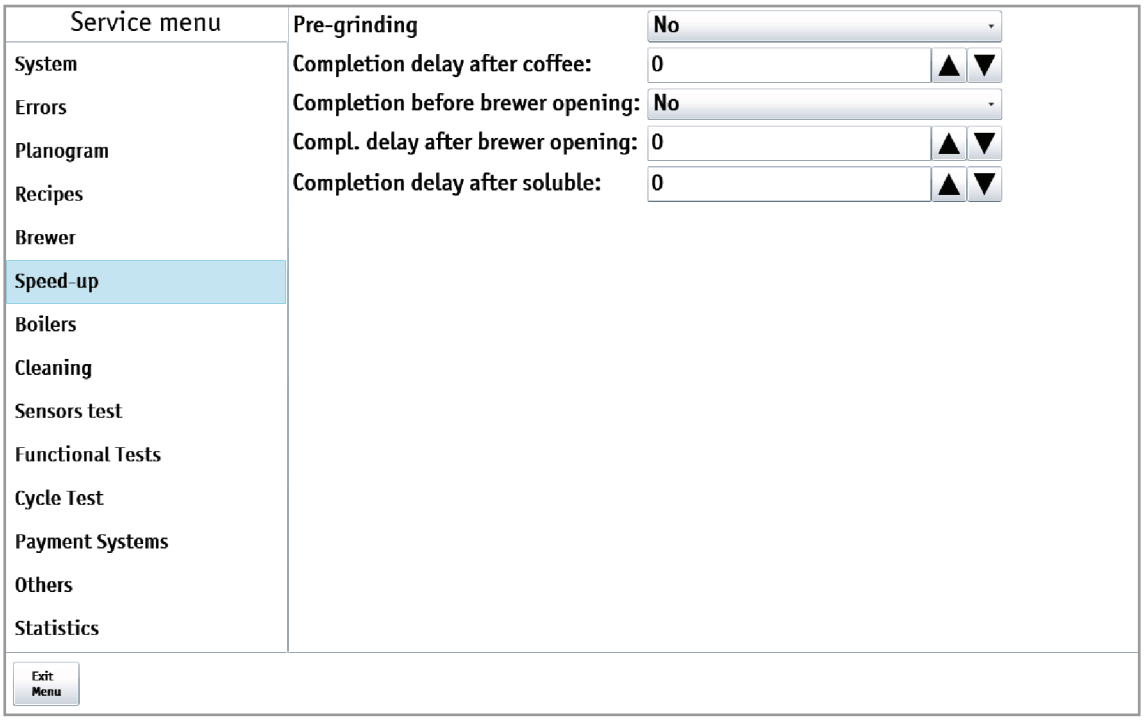

Fig.9.16 - Sped-up

NAME	DESCRIPTION	VALUE
Pre-grinding	This setting makes no difference for instant vending machines. Selecting (YES) permits quickening the making of coffee-based drinks at the expense of pre-grinding (by grinding coffee before the customer selects a drink). Also if selecting (YES), in the event the vending machine runs out of coffee beans, it will display an error before the customer selects a drink (the error occurs at the moment of the grinding attempt). If the ground coffee freshness is more important than the speed of making, select (NO) in this setting because if you select (YES), the ground coffee may remain in the dosing unit for unpredictable amount of time.	No Yes
Completion delay after coffee	Sets time (in tenths of a second) after coffee pouring (after the valve closing) for which the vending machine will wait (another 2 seconds are added to this time) before moving to the next operation. During this time the coffee group will not return to the open state, will not add the next ingredient and will not give out the cup if this ingredient was the last in the recipe. This time is necessary for the coffee tablet de-watering. This setting makes no difference for instant vending machines.	Enter number 0...240 (x 0.1ms)

NAME	DESCRIPTION	VALUE
Completion before brewer opening	This setting affects the illumination switching from red state to blue at the drink give out tray, as well as displaying the information about the drink readiness. This setting makes no difference for instant vending machines	No Yes
Compl. delay after brewer opening	This setting affects the illumination switching from red state to blue at the drink give out tray, as well as displaying the information about the drink readiness. This setting makes no difference for instant vending machines	Enter number 0...240 (x 0.1ms)
Comletion delay after soluble	This setting affects the illumination switching from red state to blue at the drink give out tray, as well as displaying the information about the drink readiness.	Enter number 0...240 (x 0.1ms)

9.1.7 Boilers

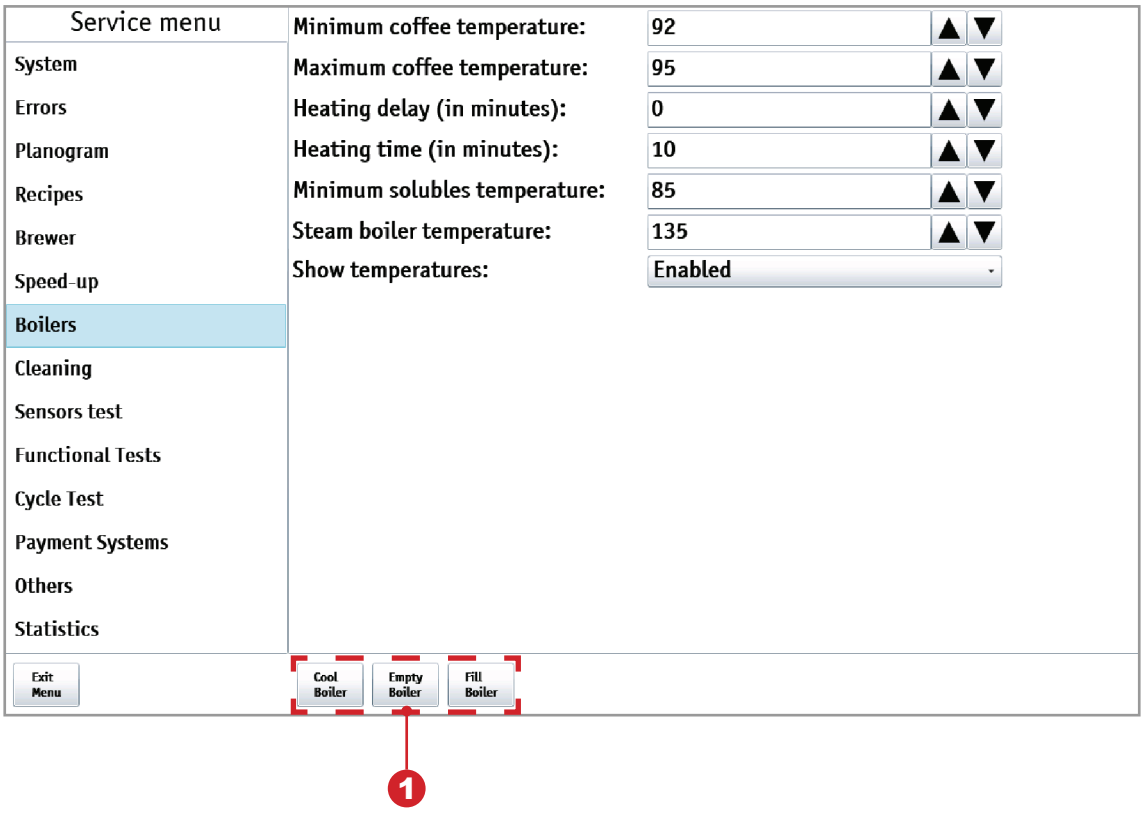

Fig.9.17 - Boilers

NAME	DESCRIPTION	VALUE
Minimum coffee temperature	Here the boiler temperature is set. This is the temperature that the vending machine will hold immediately after making a coffee-based drink (as well as after making for a time, specified in the **Heating delay** setting, considering the **Show temperatures** setting. If the heating time (the Heating time setting) is zero, then the boiler is always holding the temperature specified here.	Enter temperature
Maximum coffee temperature	Here the boiler temperature is specified, which will be held by the vending machine over the time (after making the last coffee-based drink), specified in the **Heating time** setting, plus the time, specified in the **Heating delay** setting. For instant vending machines the boiler is always held at this temperature (if the lower value in this setting is not zero) because it never brews coffee-based drinks (i.e. the time from the making of the last coffee-based drink is infinity).	Enter temperature
Heating delay (in minutes)	Time setting in minutes after the making of last coffee. The temperature will not rise in accordance with the **Minimum coffee temperature**, **Maximum coffee temperature** and **Heating time** setting algorithm.	Enter number

NAME	DESCRIPTION	VALUE
Heating time (in minutes)	Here the time for rising the boiler temperature from the specified in the **Maximum coffee temperature** setting is specified. Before this time pass the boiler temperature will gradually increase from minimum **Minimum coffee temperature** setting to maximum **Maximum coffee temperature** setting in proportion to the time passed. If 0 is specified, then the boiler temperature is always held on the level, specified in the **Minimum coffee temperature** setting. Timekeeping (during which the temperature starts rising) will start after making a coffee-based drink. The time is specified by the **Heating delay** setting.	Enter number
Minimum solubles temperature	Here the minimum permissible temperature for making the instant drinks (or hot water) is set. The vending machine starts making coffee if the actual temperature differs downward from the temperature, specified here by no more than 3 degrees. Otherwise, before making coffee, the vending machine waits for the boiler to heat up. The upward difference is not limited. It should be noted that between making drinks the temperature in the boiler is maintained in accordance with the **Minimum coffee temperature** setting. This setting comes into effect only at the moment of instant drink making. Temperature, specified here, shouldn't be higher than the temperature, specified in the **Minimum coffee temperature** setting.	Enter temperature
Steam boiler temperature	Steam boiler temperature setting for the vending machine with fresh milk option (FRESH MILK)	Enter temperature
Show temperatures	• **Included** - Boiler heating temperature display on the vending machine screen when in vending mode is ACTIVATED.	Included Disabled

Buttons (see fig.9.17 pos.1):

1. **Cool Boiler** - Automatic boiler cools due to pumping cold water through it to a temperature of 45 degrees.

2. **Empty Boiler** - The machine empties the boiler, after the devastation of the boiler must be switched off, unscrew the bottom hose and turn on the machine (following the inclusion of machine translated it into service mode, where it will open the valve by pouring water through the rest of the bottom of the boiler).

3. **Fill Boiler** - The machine fills the boiler. If the boiler does not have time to be filled during pump operation - 30 sec., The cycle repeats until discharge water into the canister waste

9.1.8 Cleaning

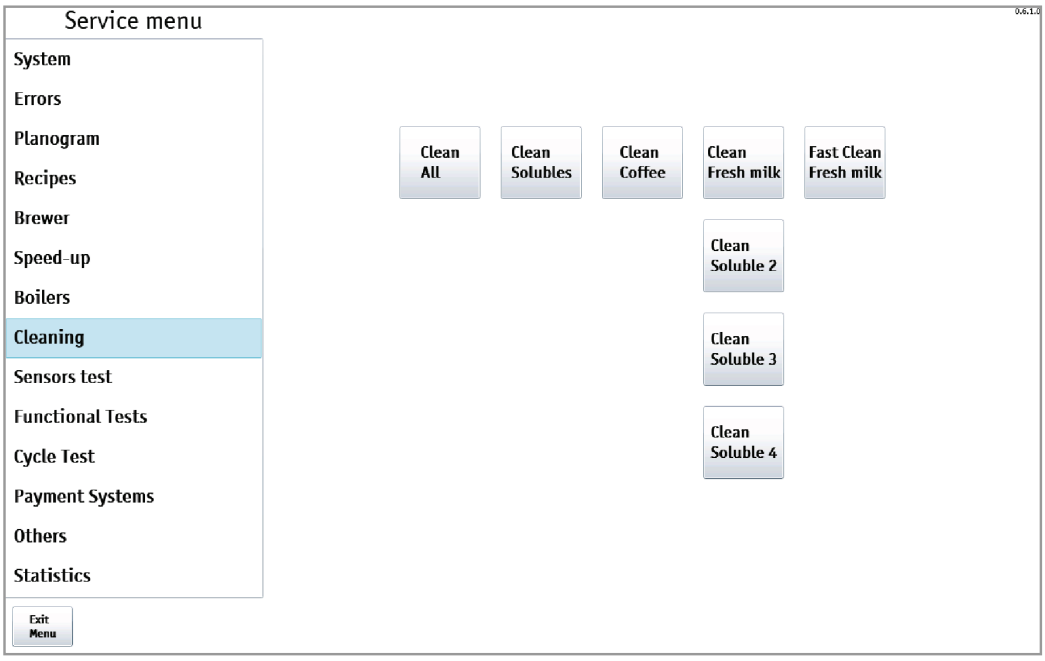

Fig.9.18a - Cleaning (option FRESH MILK)

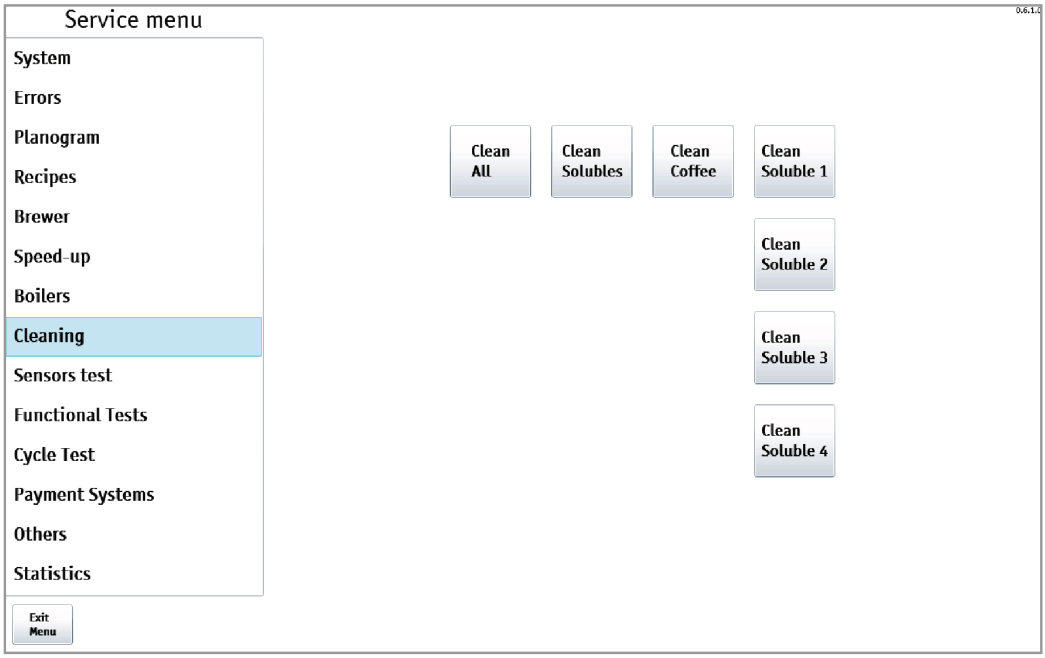

Fig.9.18b - Cleaning

BUTTON	DESCRIPTION
Clean All	Cleaning the drink preparation and dispensing systems
Clean Solubles	Start flushing of instant drink dispensing system
Clean Coffee	Start flushing the ground coffee feed system
Clean Fresh milk	Start flushing the fresh milk supply systems (only FRESH MILK).
Clean Soluble 1...4	Start flushing the instant drink 1...4 dispensing system
Fast Clean Fresh milk	Fresh milk supply system fast cleaning (for FRESH MILK only) without a washing agent.

9.1.9 Sensors test

To view real-time sensor readings of the machine.

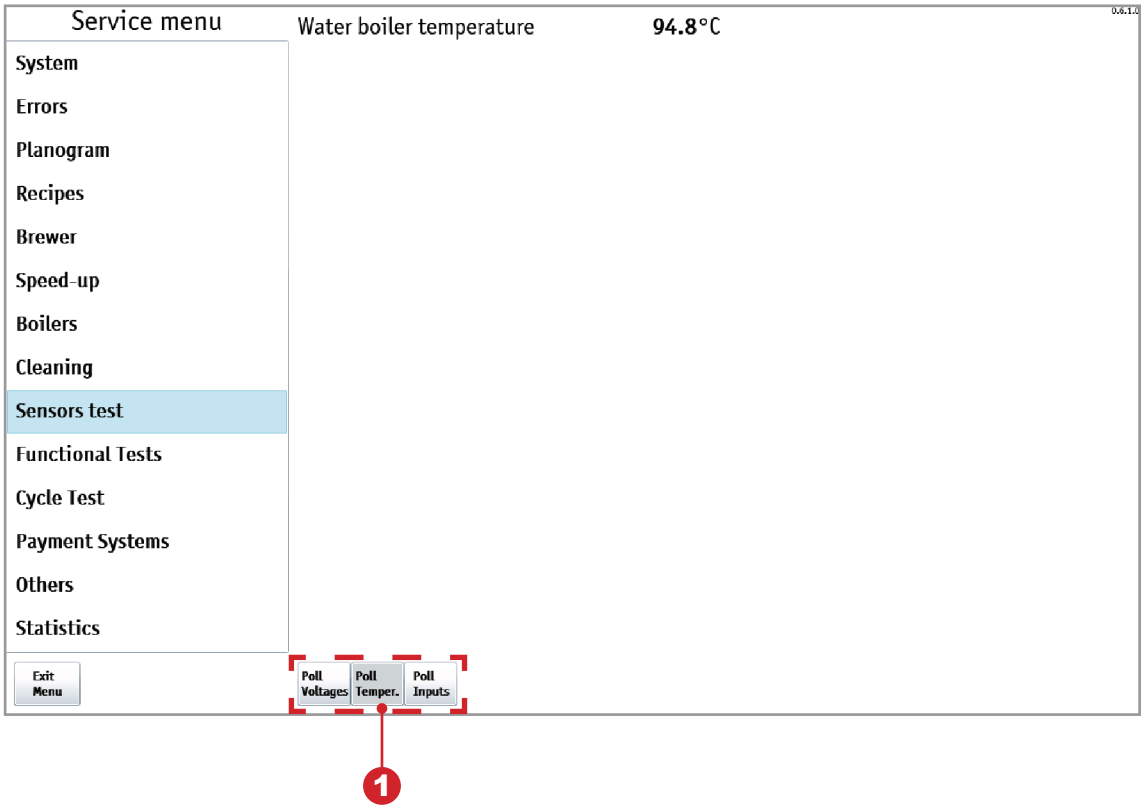

Fig.9.19 - Sensors tests

Buttons (1):

1. **Poll Voltages** - Displays voltage power board.
2. **Poll Temper.** - Displays information from the temperature sensors machine.
3. **Poll Inputs** - Displays information from the machine sensors designed to pick-up readings.

9.1.10 Functional Tests

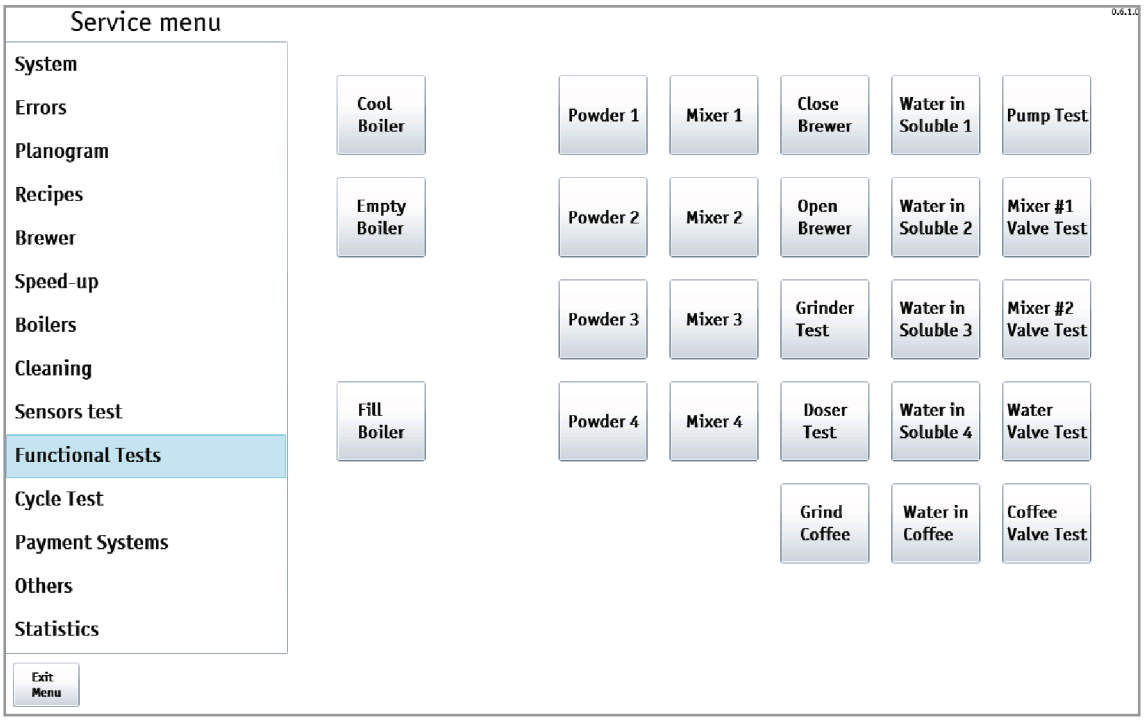

Fig.9.20 - Functional tests

BUTTON	DESCRIPTION
Cool Boiler	Automatic boiler cools due to pumping cold water through it to a temperature of 45 degrees.
Empty Boiler	The machine empties the boiler, after the devastation of the boiler must be switched off, unscrew the bottom hose and turn on the machine (following the inclusion of machine translated it into service mode, where it will open the valve by pouring water through the rest of the bottom of the boiler).
Fill Boiler	The machine fills the boiler. If the boiler does not have time to be filled during pump operation - 30 sec., The cycle repeats until discharge water into the canister waste
Powder 1...4	Automatic pouring an ingredient (powder) of the corresponding container button
Mixer 1...4	The motor of a mixer appropriating the button about on 0.2 sec.
Close Brewer	When entered it closes the espresso group in coffee making state
Open Brewer	When entered the espresso group is opened in initial state to grind coffee
Grinder Test	When entered it turns ON the coffee grinder for 0.5 seconds provided that the dosing apparatus is not full
Doser Test	When entered it opens the dosing apparatus twice (if it contains ground coffee, it is dropped into the nozzle)
Grind Coffee	When entered it passes ground coffee into the nozzle
Water in Soluble 1...4	Water supply to the mixer 1 .. 4
Water in Coffee	Supply of water to espresso group

BUTTON	DESCRIPTION
Pump Test	Testing the functioning of boiler's pump
Mixer #1 Valve Test	Opens the boiler valve for hot water supply to the first mixer, closes the valve
Mixer #2 Valve Test	Opens the boiler valve for hot water supply to the second mixer, closes the valve
Water Valve Test	Opens the boiler valve for hot water supply, closes the valve
Coffee Valve Test	The vending machine changes the espresso group to the brewing position, opens the boiler valve for the espresso group, closes the valve, and returns the espresso group to the initial (open) position

9.1.11 Cycle Test

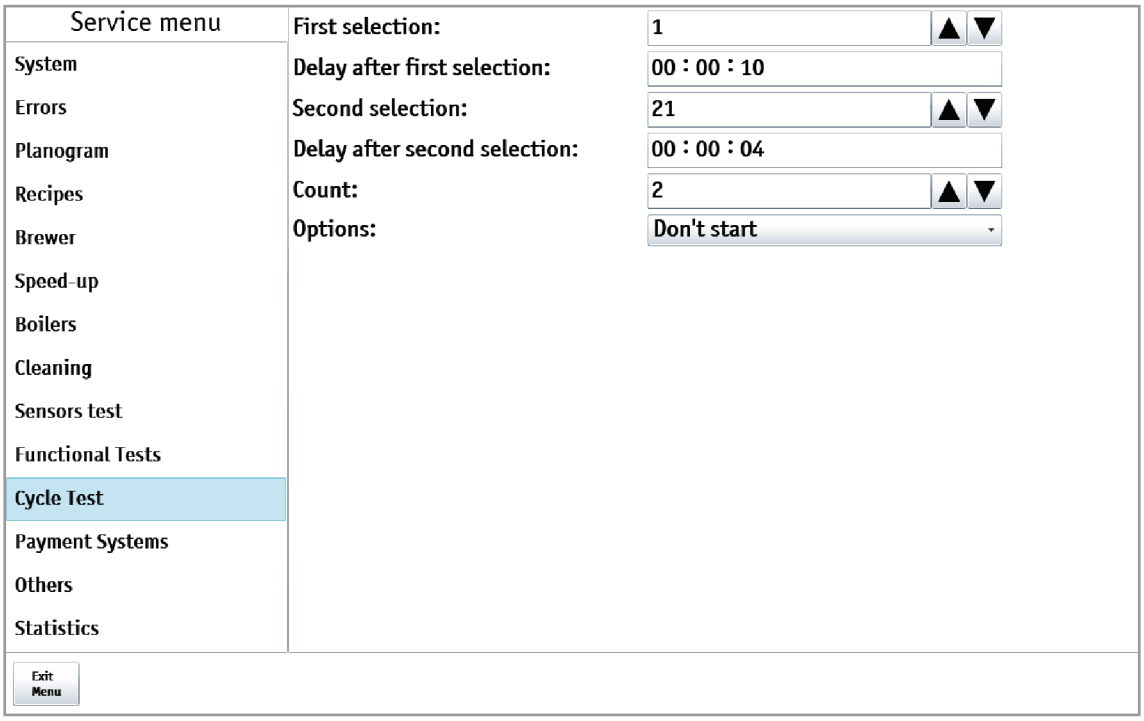

Fig.9.21 - Cycle test

NAME	DESCRIPTION	VALUE
First selection	Setting number of the first test beverage	Enter number
Delay after first selection	Pausing after the preparation of the first test drink	Enter number (hh:mm:ss)
Second selection	Set number two test beverage	Enter number
Delay after second selection	Pausing after the preparation of the second test drink	Enter number (hh:mm:ss)
Count	Set the number of test cycles	Enter number
Options	**Start**-Running cycle test when you reboot the machine	Don’t start Start

9.1.12 Payment Systems

Fig.9.22 - Payment system

BUTTON	DESCRIPTION
Signal Mainten.	Sending collection data to the telemetry server. Usually, there's no need to use this function, because collection data is sent to the server automatically when loading the coin receptacle / removing the cashbox / removing the stacker. The button is used when the vending machine is operating without payment systems, or if the cashbox/stacker sensors are absent or faulty.

9.1.13 Others

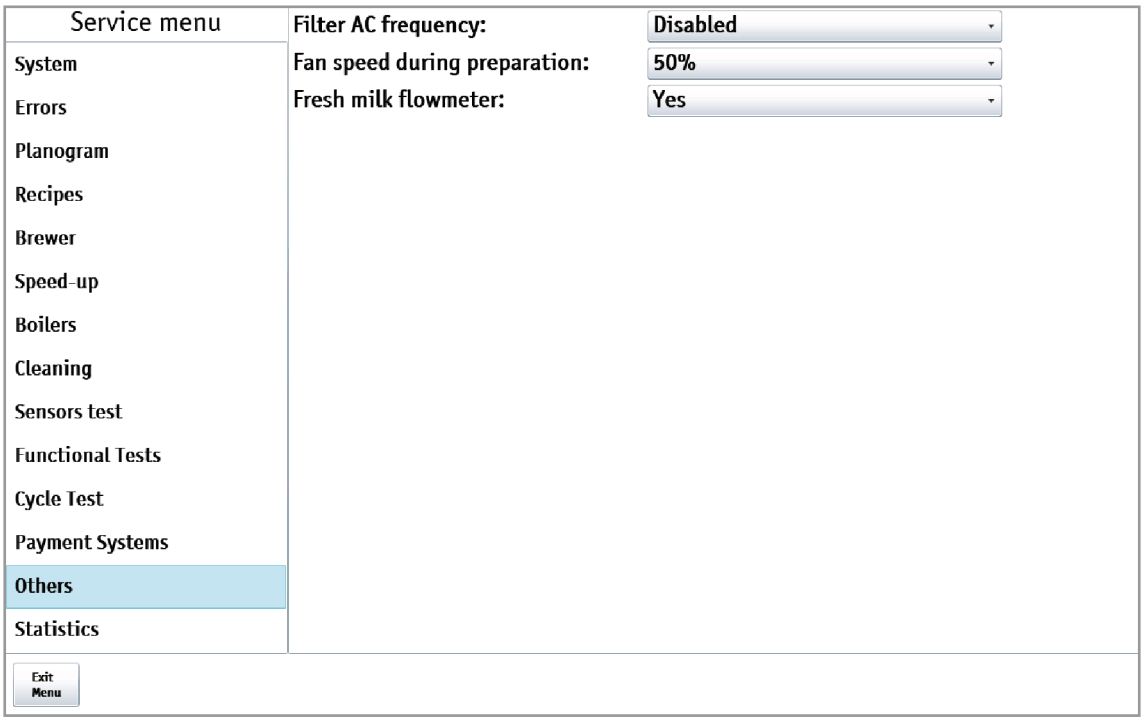

Fig.9.23 - Others

NAME	DESCRIPTION	VALUE
Filter AC frequency	The setting permits enabling/disabling the software mains frequency filter in cases when the ~220 V mains used for the vending machine power supply is noisy. The recommended selection of the setting is **DISABLED** (the filter is not used). If in case of the **DISABLED** selection the vending machine generates too many frequency errors (the mains is noisy), enable the filter (choose **ENABLED**). When operating the vending machine from gasoline and diesel generators, the activation of the program filter is not recommended, because this filter operates well only provided the mains frequency conforms to standards and is stable.	Included Disabled
Fan speed during preparation	Enables you to reduce speed of the drier fan when dispensing powder: **50%** - the fan slows down to half speed when dispensing powder **100%** - do not reduce speed when dispensing powder **OFF** - the fan is turned OFF when dispensing powder	50% 100% Off
Fresh milk flowmeter	This setting is actual only for the vending machines with fresh milk option (FRESH MILK) • **YES** - if the vending machine has the milk flow meter installed; • **NO** - if the flow meter is not installed.	Yes No

9.1.14 Statistics

The vending machine statistical data display. Data display is implemented in the “Аудит” (Audit) program.

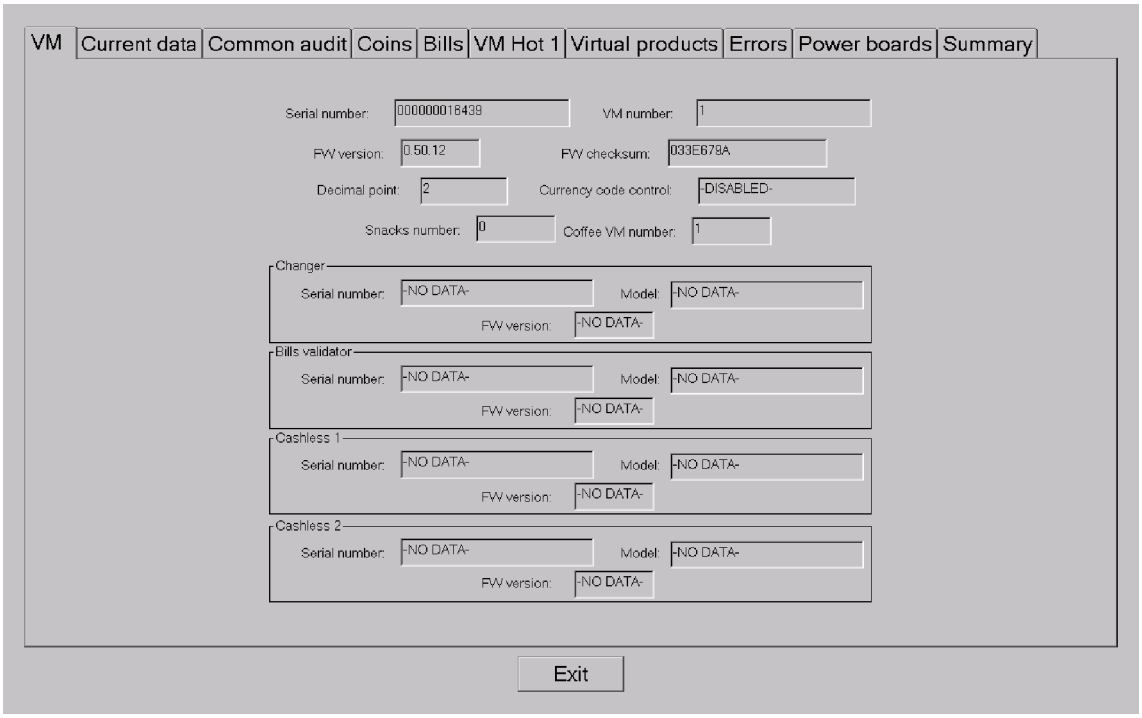

Fig.9.24 - Statistics

9.1.14.1 Vending machine (VM)

View general information on the automaton.

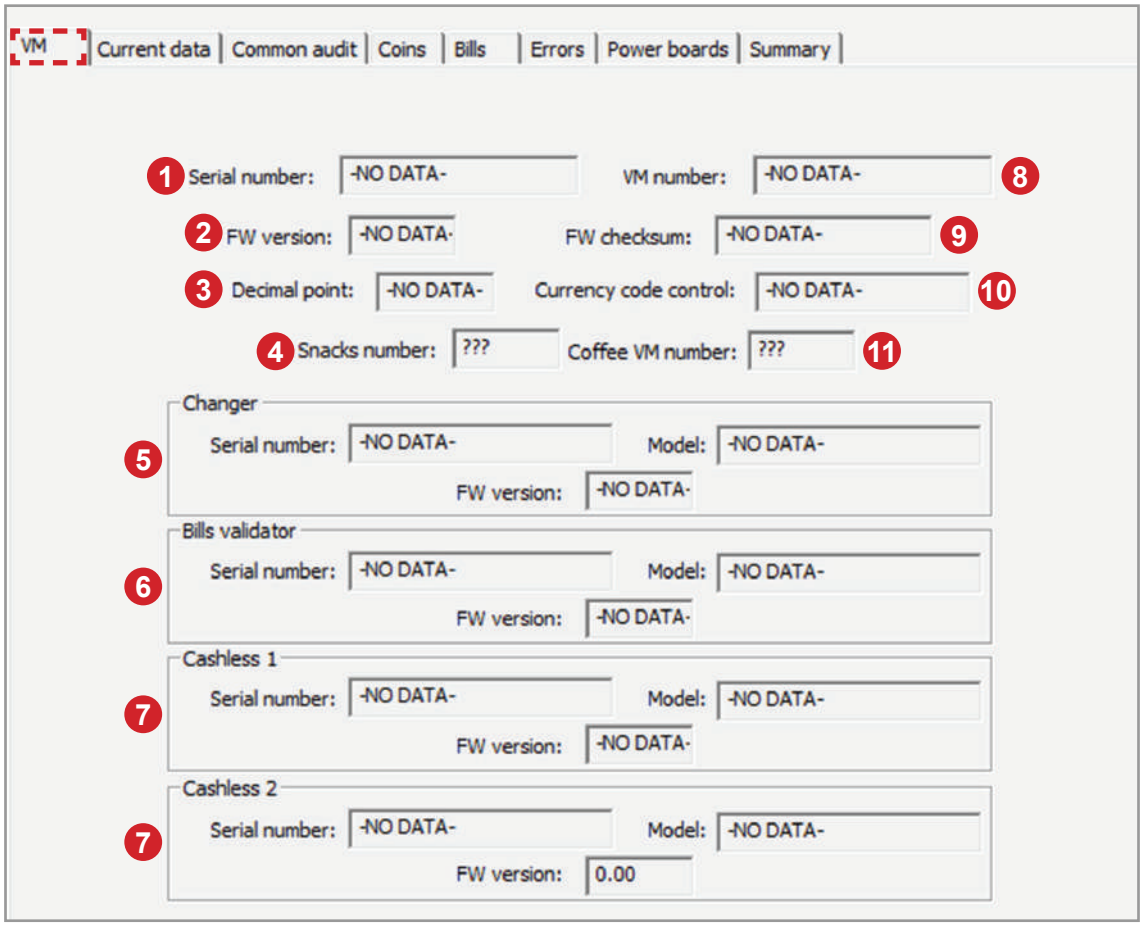

Fig.9.25 - Statistics (VM)

NAME	DESCRIPTION
1.Serial number	Serial number of Main Board
2.FM version	Firmware version of Main Board
3.Decimal point	Shows decimal point value for sums and prices
4.Snacks number	Displays the number of connected SLAVE-machines
5.Changer	Serial number - serial number of change giver (coin acceptor) Model - type (model) of change giver/coin acceptor FM version - firmware version of change giver/coin acceptor
6.Bill validator	Serial number - serial number of bills validator Model - type (model) of bills validator FM version - firmware version of bills validator
7.Cashless 1...2	Serial number - serial number of card reader 1,2 Model - type (model) of card reader 1,2 FM version - firmware versionof card reader 1,2
8.VM number	Configurable machine number
9.FM checksum	Main board firmware checksum. Used to verify
10.Currency code control	Not used
11.Coffee VM number	Displays the number of connected machines selling drinks

9.1.14.2 Current data

Here is represented current statistic information.

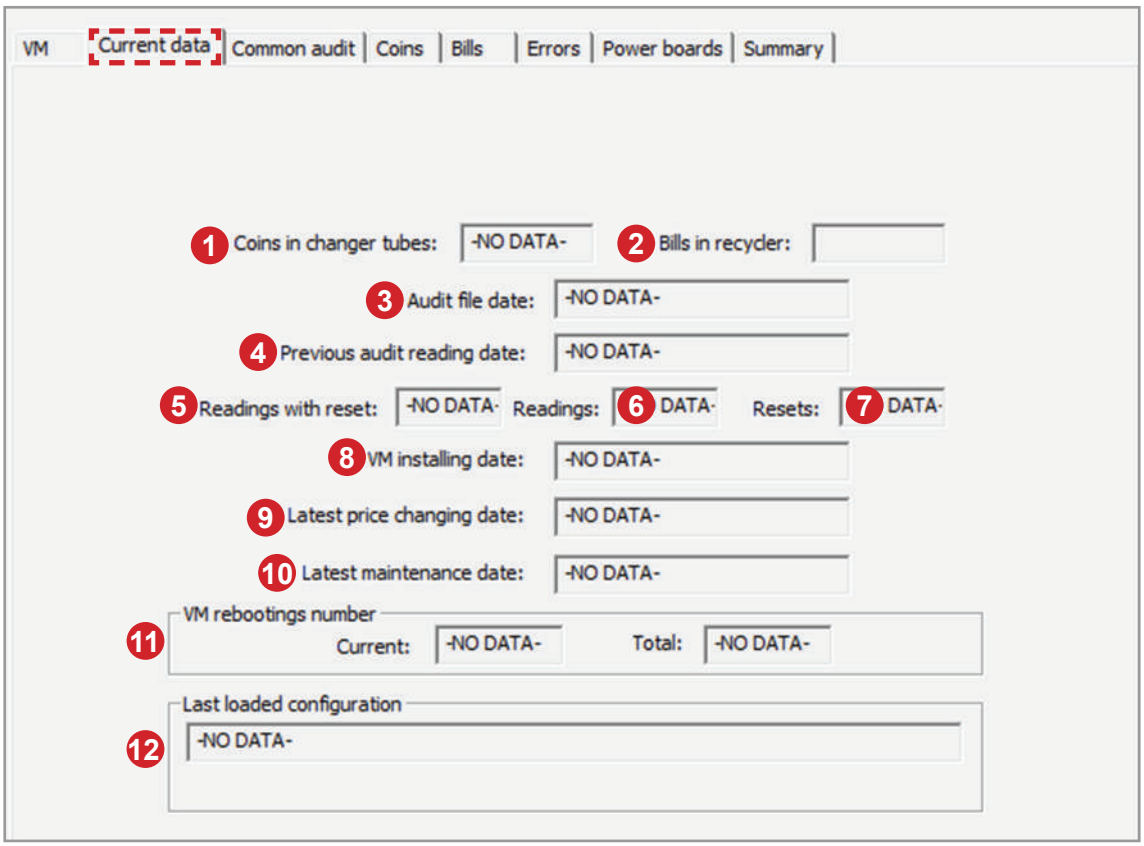

Fig.9.26 - Statistics (Current Data)

NAME	DESCRIPTION
1.Coins in changer tubes	Coins amount in coin acceptor
2.Bills in recyder	Bills amount in recycler
3.Audit file date	Creation date and time of current audit file
4.Previous audit reading date	Date and time of the audit file last reading
5.Readings with reset	Number of audit file readings with resets of resettable counters
6.Readings	Total number of audit file readings (with or without resets)
7.Resets	Total number of resettable counters resets (with or without audit file reading)
8.VM installing date	Date and time of the machine installation - is set when the first start of the machine is performed due to the built-in timer
9.Latest price changing date	Date and time of the last price change
10.Latest maintenance date	Date and time when the last maintenance was performed

NAME	DESCRIPTION
11.VM rebootings number	Amount of the machine rebooting **Current** - after the last reset of resettable counters **Total** - during the whole machine performance
12.Last loaded configuration	Displays full name of config file, which was used for the last uploading of settings. It's also marked whether the settings have been changed manually after the config file uploading or not

9.1.14.3 Common audit

VM | Current data | Common audit | Coins | Bills | Errors | Power boards | Summary

Name	Current count	Current value	Total count	Total value
Paid vends	-NO DATA-	-NO DATA-	-NO DATA-	-NO DATA-
Discounts	-NO DATA-	-NO DATA-	-NO DATA-	-NO DATA-
Surcharges	-NO DATA-	-NO DATA-	-NO DATA-	-NO DATA-
Test vends	-NO DATA-	-NO DATA-	-NO DATA-	-NO DATA-
To cashbox in test mode	-	-NO DATA-	-	-NO DATA-
Free vends	-NO DATA-	-NO DATA-	-NO DATA-	-NO DATA-
Cash vends	-NO DATA-	-NO DATA-	-NO DATA-	-NO DATA-
Cash accepted	-	-NO DATA-	-	-NO DATA-
Coins to cashbox accepted	-	-NO DATA-	-	-NO DATA-
Coins to tubes accepted	-	-NO DATA-	-	-NO DATA-
Bills accepted	-	-NO DATA-	-	-NO DATA-
Bills to stacker accepted	-	-NO DATA-	-	-NO DATA-
Bills to recycler accepted	-	-NO DATA-	-	-NO DATA-
Coins dispenced/man.disp.	-	-NO DATA-	-	-NO DATA-
Coins manual dispenced	-	-NO DATA-	-	-NO DATA-
Change with coins	-	-NO DATA-	-	-NO DATA-
Bills dispenced/man.disp.	-	-NO DATA-	-	-NO DATA-
Bills manual dispenced	-	-NO DATA-	-	-NO DATA-
Change with bills	-	-NO DATA-	-	-NO DATA-
Bills transferred to stacker	-	-NO DATA-	-	-NO DATA-
Cash discounts	-NO DATA-	-NO DATA-	-NO DATA-	-NO DATA-
Cash surcharges	-NO DATA-	-NO DATA-	-NO DATA-	-NO DATA-
Cash overpay	-	-NO DATA-	-	-NO DATA-
Coins filled	-	-NO DATA-	-	-NO DATA-
Bills filled	-	-NO DATA-	-	-NO DATA-
Server credit	-	-NO DATA-	-	-NO DATA-
Cashless 1 vends	-NO DATA-	-NO DATA-	-NO DATA-	-NO DATA-
Cashless 2 vends	-NO DATA-	-NO DATA-	-NO DATA-	-NO DATA-
Cards 1 out	-	-NO DATA-	-	-NO DATA-
Cards 2 out	-	-NO DATA-	-	-NO DATA-
Cards 1 in	-	-NO DATA-	-	-NO DATA-
Cards 2 in	-	-NO DATA-	-	-NO DATA-
Cashless 1 discounts	-NO DATA-	-NO DATA-	-NO DATA-	-NO DATA-
Cashless 2 discounts	-NO DATA-	-NO DATA-	-NO DATA-	-NO DATA-
Cashless 1 surcharges	-NO DATA-	-NO DATA-	-NO DATA-	-NO DATA-
Cashless 2 surcharges	-NO DATA-	-NO DATA-	-NO DATA-	-NO DATA-
Cashless 1 bonuses	-	-NO DATA-	-	-NO DATA-
Cashless 2 bonuses	-	-NO DATA-	-	-NO DATA-
Cashless 1 overpay	-	-NO DATA-	-	-NO DATA-
Cashless 2 overpay	-	-NO DATA-	-	-NO DATA-
Mixed with cashless 1 vends cash	-NO DATA-	-NO DATA-	-NO DATA-	-NO DATA-
Mixed with cashless 2 vends cash	-NO DATA-	-NO DATA-	-NO DATA-	-NO DATA-
Cards 1, user group 1 vends	-NO DATA-	-NO DATA-	-NO DATA-	-NO DATA-
Cards 1, user group 1 in	-	-NO DATA-	-	-NO DATA-
Cards 1, user group 1 discounts	-	-NO DATA-	-	-NO DATA-
Cards 1, user group 2 vends	-NO DATA-	-NO DATA-	-NO DATA-	-NO DATA-
Cards 1, user group 2 in	-	-NO DATA-	-	-NO DATA-

Fig.9.27 - Statistics (Common audit)

Here is represented detailed information of audit operations:

- Name (Audit parameter)
- Current count (Amount of operations since the last audit reset)
- Total count (Amount of operations during the whole period of machine performance)
- Current value (Summary value since the last audit reset)
- Total value (Summary value during the whole period of machine performance)

9.1.14.4 Coins

Here is represented information about coins: separately for each denomination, the amount of coins in the coin acceptor and in the cash box, the amount of coins after the last reset and during the entire period of machine operation, amount of dispensed coins and filled coins.

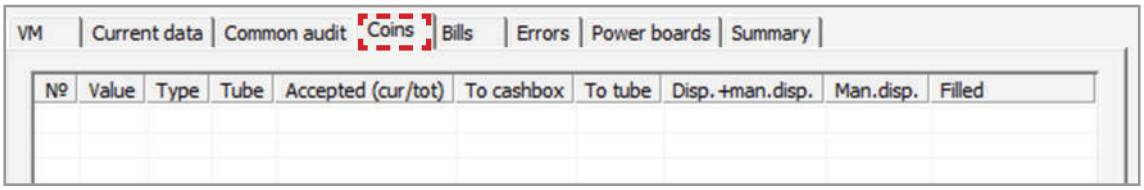

Fig.9.28 - Statistics (Coins)

9.1.14.5 Bills

Here is represented information about cash, similarly like item Coins (see above).
Information is shown if bill acceptor is installed and operates properly

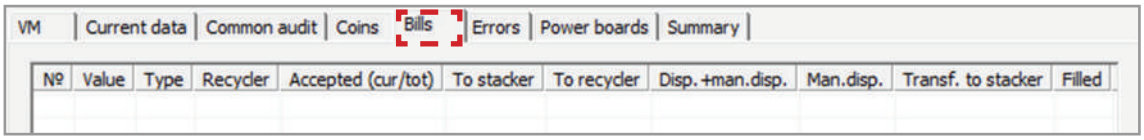

Fig.9.29 - Statistics (Bills)

9.1.14.6 Errors

Here is represented information about errors: name, time and date, amount, actuality.

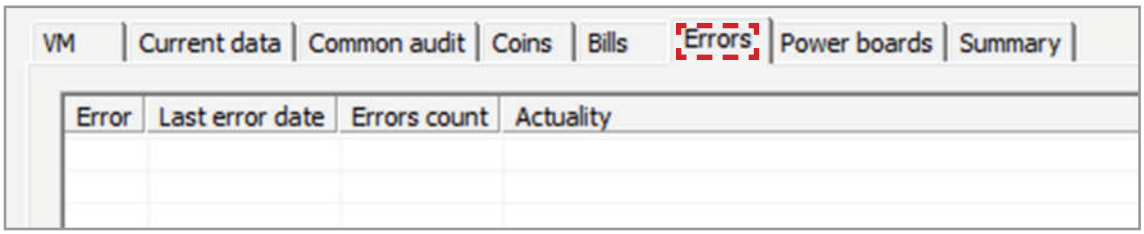

Fig.9.30 - Statistics (Errors)

9.1.14.7 Power boards

Here is represented information about boards of machine power boar.

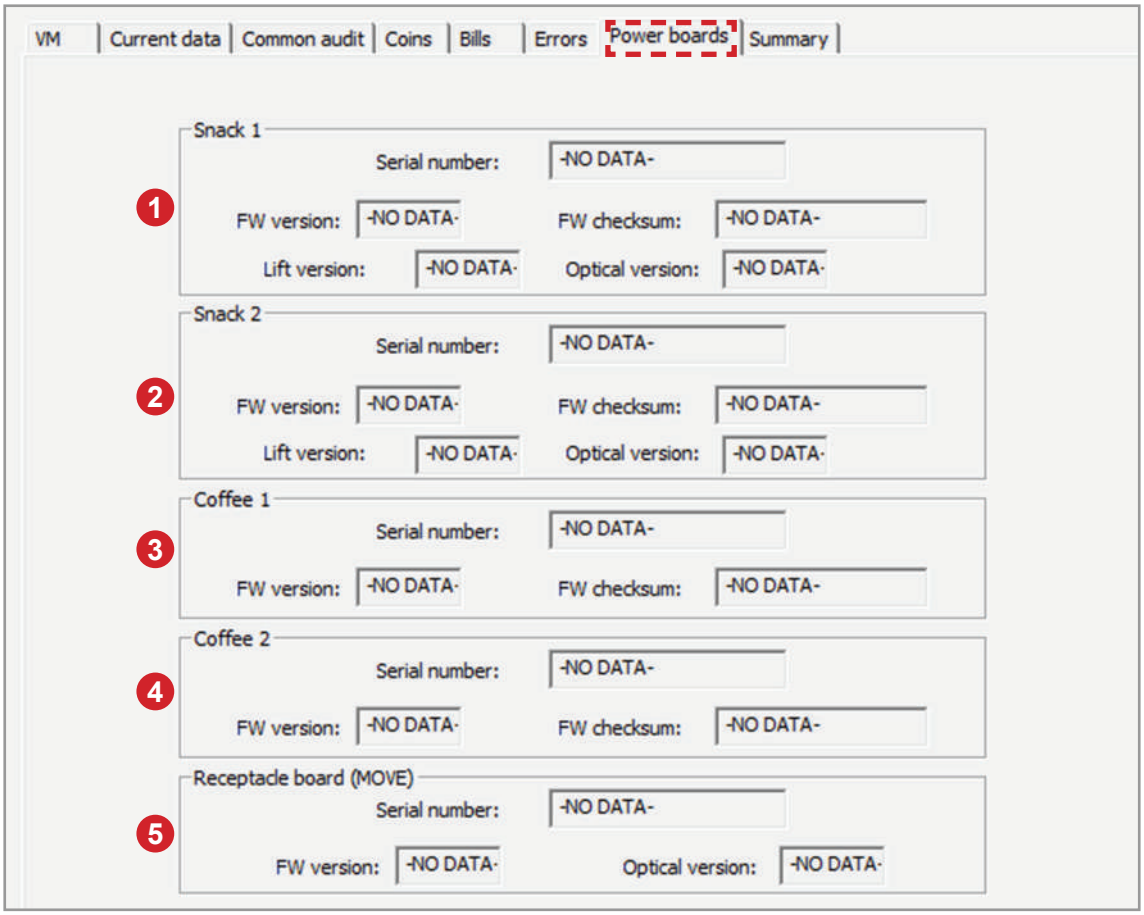

Fig.9.31 - Statistics (Power boards)

NAME	DESCRIPTION
1.Snack 1	Not used
2.Snack 2	Not used
3.Coffee 1	Serial number of a power board; Versions of the software; The Control sum
4.Coffee 2	Not used
5.Receptacle board (MOVE)	Not used

9.1.14.8 Summary

Here is represented the summary information, that had been represented in the previous tabs of AUDIT menu.

VM | Current data | Common audit | Coins | Bills | Errors | Power boards | Summary

Name	Current	Total	Maintenance
Coins man. dispenced	-NO DATA-	-NO DATA-	
Bills man. dispenced	-NO DATA-	-NO DATA-	
Cash accepted	-NO DATA-	-NO DATA-	
Vends value	-NO DATA-	-NO DATA-	
Change with coins	-NO DATA-	-NO DATA-	
Change with bills	-NO DATA-	-NO DATA-	
Cash overpay	-NO DATA-	-NO DATA-	
Cards 1 in	-NO DATA-	-NO DATA-	
Cards 1 out	-NO DATA-	-NO DATA-	
Cards 2 in	-NO DATA-	-NO DATA-	
Cards 2 out	-NO DATA-	-NO DATA-	
Coins filling	-NO DATA-	-NO DATA-	
Bills filling	-NO DATA-	-NO DATA-	
Coins to cashbox	-NO DATA-	-NO DATA-	
Bills accepted	-NO DATA-	-NO DATA-	
Bills to stacker	-NO DATA-	-NO DATA-	
Test vends	-NO DATA-	-NO DATA-	
Server credit	-NO DATA-	-NO DATA-	

Fig.9.32 - Statistics (Summary)

10.0 DESCRIPTION SERVICE MENU - OPERATOR MENU

The vending machine servicing is realized in the SERVICE MODE. To optimize the servicing the vending machine is supplied with two types of the SERVICE MENU with different rights.

- **Service engineer menu/Menu technician:** provides the access to all controller software functionality. To enter the menu open the vending machine door, insert the service key into the door trip, and press the (Menu technician) on the quick access keypad (see section 6.2).

- **Operator menu:** provides the access to the vending machine functionality during the periodic maintenance, such as the event log, equipment operation and faults information, access to setting up the information about the drinks, and the viewing of the sales statistics. To enter the menu open the vending machine door, insert the service key into the door trip, and press the (Operator menu) on the quick access keypad (see section 6.2).

Note: Input the password for accessing the menu technician/operator (if the password is set). The password is set in the menu technician settings.

10.1 Operator menu

After accessing the operator menu, the operator menu main screen with menu sections is shown (see fig. 10.1). To select the required menu section, touch its name. Then the page of the section with settings is shown.

Some menu settings may be inaccessible until the access rights are issued from the menu technician.

You can get more information about the sections settings of the operator menu by viewing the corresponding sections settings of the menu technician!

Fig.10- Main page

11.0 GENERAL TECHNICAL SERVICING

11.1 General requirements

After the installation of the vending machine it necessary to carry out complete disinfection of all water tracts (milk tract - only FRESH MILK) and other components that come in contact with the food products, to kill all bacteria that might grow inside during storage.

The operator must conduct technical servicing of the equipment to prevent the growth of hazardous bacteria, no less than once a week or even more frequently depending on the operating conditions of the vending machine, its location and water quality.

Note: When using fresh milk (FRESH MILK option) in the vending machine the cleaning of the milk supply and pouring line should be performed EVERY DAY.

It is recommended to use suitable washing materials, which are permissible for use in the food industry.

Please note that some of the vending machine's components might be damaged because of the use of unsuitable washing materials. The manufacturer of the machine bears no responsibility for damage caused by the use of unsuitable chemical or toxic substances.

Always disconnect the vending machine from the power mains, before starting technical service or change of components.

Before conducting the vending machine maintenance follow the following hygienics:

- Always wash your hands before handling the food products. .
- To clean the milk supply and pouring system (FRESH MILK option) it's recommended to use the solution, prepared of the cleaning agents concentrates of the following trademarks: Franke Milch-reiniger, Specialcleaner for milksystems (Schulz&Sohn GmbH).
- The foodstuff should be securely stored in the tightly closed package with the observance of the storage temperature conditions and shelf life.

The cleaning should be realized in strict accordance with this manual.

ATTENTION! Perishable foodstuff! Food poisoning and illness hazard!

- Take into consideration the shelf life, indicated by the foodstuff manufacturer.
- Replace the foodstuff with the expired shelf life by the foodstuff with valid shelf life.
- Never use foodstuff upon the expiration of the shelf life.
- Use only foodstuff qualified for vending machines.
- Use only precooled milk (FRESH MILK option).
- Replace fresh milk every day (FRESH MILK option).

ATTENTION!
Very high cleaning temperature!
Plastic parts damage risk!

- When cleaning the vending machine plastic parts don't exceed the temperature of 65 ^{0}C.
- Make sure that the waste containers inside the vending machine are under the nozzles for drinks during the execution of the washing program.

Note: Cleaning and maintenance operations should be logged.

ATTENTION! Never use abrasive agents for cleaning the vending machine!

11.2 Cleaning list

Daily

Component	Operations	Manual section	Means
Espresso group	Remove coffee residues	11.2.1.1	Brush
Milk system	Start the cleaning program	11.2.1.2	Cleaning solution
Waste containers	Emptying and cleaning	11.2.1.3	Washing agent, rag
Drop tray, tray grill	Emptying and cleaning	11.2.1.4	Washing agent, rag
Cup tray	Cleaning	11.2.1.5	Washing agent, rag
Case (from the outside)	Cleaning	---	Damp cloth
Milk container (for FRESH MILK only)	Cleaning	11.2.1.6	Washing agent, rag

Weekly

Component	Operations	Manual section	Means
Milk flow meter (for FRESH MILK only)	Disassembling and cleaning	11.2.2.1	Damp cloth
Check valve (for FRESH MILK only)	Disassembling and cleaning (only as appropriate)	11.2.2.2	Cleaning solution
Containers for soluble ingredients	Cleaning of all individual parts	11.2.2.3	Washing agent, rag
Coffee container	Cleaning	11.2.2.4	Washing agent, rag
Mixer assembly	Disassembling and cleaning	11.2.2.5	Washing agent, rag
Cappuccinatore	Disassembling and cleaning	11.2.1.6	Washing agent, soft bottle-washing brush

11.2.1 Daily operations

11.2.1.1 Espresso group

1. Open the vending machine door
2. Remove the coffee residues from the upper part of the espresso group by using a brush.

11.2.1.2 Milk system (FRESH MILK)

ATTENTION! The regular milk system cleaning should be realized at the interval no less than 24 hours from the moment of the last cleaning!

When the set interval between the washes is coming to an end, the vending machine will show the notice about the washing need on its screen.

The time interval setting between the milk system washes is set in the program Configurator the **Coffee clean.** tab - see the manual at the web-site: www.unicum.ru. Here in the, **Time before milk cleaning, hours.** setting choose the interval from 1 to 3 hours.

If during the specified time no sales of drinks with the addition of foamed milk were conducted, the vending machine pours off some milk to the drop tray to avoid milk stagnation in the system. This measure permits preventing the formation of sour milk.

ATTENTION! If during one hour after the appearance of the notice the vending machine wasn't washed, then all the drinks with the addition of fresh milk will be blocked!

Washing means

Milk system washing should be realized by using the special washing agent. It's a concentrate for dissolving in water **(in ratio 30 ml of the agent and 500 ml of water)**.

It's recommended to conduct washing by using the solution, prepared from the following concentrates: Franke Milchreiniger, Specialcleaner for milksystems (Schulz&Sohn GmbH).

If the vending machine was switched off with the milk system filled with milk and was at the standstill for more than 24 hours, then the mechanical removal of coagulated milk from tubes, valves, flow meter and cappuccinatore may be required. It's recommended to soak the system components in a washing solution for **10 min**.

Before washing prepare:

1. The washing solution of 500 ml (0.5 l) **(in the ratio of 30 ml of the concentrate and 500 ml of water)**.
2. Empty the container for liquid wastes.
3. Prepare the container with pure potable water of 350 ml (0.35 l).

ATTENTION! Cleaning agents may cause eye and skin irritation. Store the cleaning agents in a safe place. If cleaning agents come in contact with eyes rinse the eyes thoroughly and consult a doctor.

Washing operations:

1. Switch the vending machine off by turning the switch at the rear wall to the “0” position.
2. Open the door.
3. Get the milk supply tube from the milk container.
4. Empty the container for liquid wastes.
5. Place the container for liquid wastes under the cappuccinatore.
6. Insert the service key into the door trip (see section 3.2).
7. Switch the vending machine on by turning the switch at the rear wall to the “I” position.
8. Wait for the vending machine boilers to heat up, this may take some time.
9. When you see the inscription **Make a selection** on the screen you may proceed to the milk system washing.
10. To wash the milk system put the milk supply tube into the container with water.
11. Press the **Flushing** button on the inner surface of the vending machine door (see fig. 5.2 pos. 10 and fig. 6.2).
12. On the vending machine screen, the washing page should appear (see fig. 11.1).

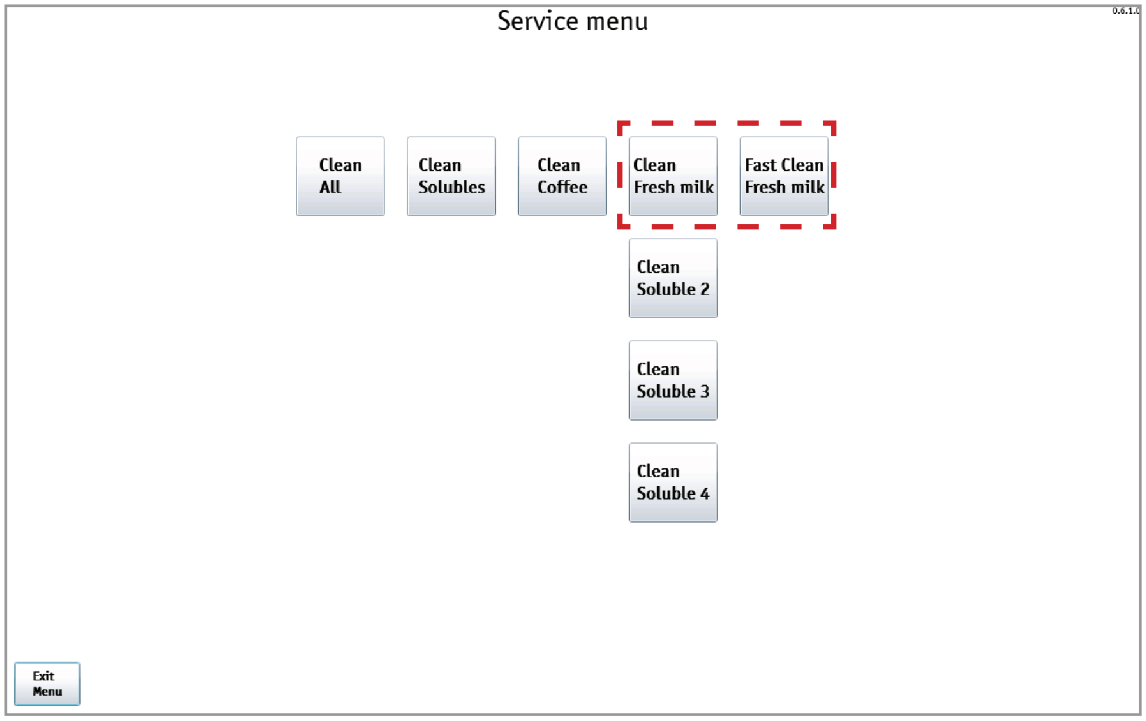

Fig.11.1 - Milk system washing

13. Press the **Clean Fresh milk** button.
14. Follow the instructions on the vending machine screen:

- when the **Cleaning by water** inscription appears – the vending machine washes milk residues from the system (the system will be flushed by 100 ml of water).
- upon completion of the previous operation, the **Prepare cleanser** inscription appears – put the milk supply tube into the washing solution and press **YES**.
- the **Cleaning by cleanser** inscription appears – the vending machine washes the system by 225 ml of washing agent.
- the **Prepare cleanser** inscription appears – in 1 minute the confirmation of the operation becomes available, press **YES** again.

- the **Cleaning by cleanser** inscription appears – the vending machine flushes the system with the remainder of the washing agent. The system will be flushed by another 225 ml of washing agent.

- upon completion of the previous operation, the **Prepare water** inscription appears – put the milk supply tube into the container with water and press **YES**.

- the **Cleaning by water** inscription appears – the vending machine washes the residues of the washing agent from the system away. The vending machine will flush 250 ml of water, washing the residues of the washing agent away.

- upon completion of the previous operation, the **Prepare milk** inscription appears – put the milk supply tube into the container with milk and press **YES**. ***Make sure that there's no washing solution on the tube external surface. Remove the residues by clean damp cloth and wipe dry as appropriate.***

- the **Filling with milk** inscription appears – the vending machine fills the system with 15 ml of milk.

- after the successful completion of washing the **OK** inscription appears.

If the cancel button is pressed, the washing cycle is finished. If not washing the system in time, the vending machine will generate an error. The following inscription will be shown: HOT NO FRESH MILK.

Drinks with fresh milk will become inaccessible!

15. The vending machine milk system is washed and filled with fresh milk.
16. Switch the vending machine off by turning the switch at the rear wall to the "0" position.
17. Take out the service key.
18. Clean the cappuccinatore by following the instructions as appropriate (Cappuccinatore cleaning – see below).
19. Close the vending machine door.
20. Switch the vending machine on by turning the switch at the rear wall to the "I" position.
21. The vending machine is ready for operation.

Note: The **Fast Clean Fresh** milk button is recommended for use in vending machines with a check valve for filling the system with milk after conducting the "full washing", so that the first portion after the washing had no milk with water. Washing operations (see above) has no items for a washing agent.

11.2.1.3 Waste containers (see fig. 11.2)

1. Open the vending machine door
2. Raise the bracket with nozzles for drinks slightly
3. Remove the containers with water surplus and coffee wastes by pulling on
4. Empty the containers
5. Thoroughly wash the containers by warm water with a washing agent
6. Wipe the containers dry and install them back into the vending machine

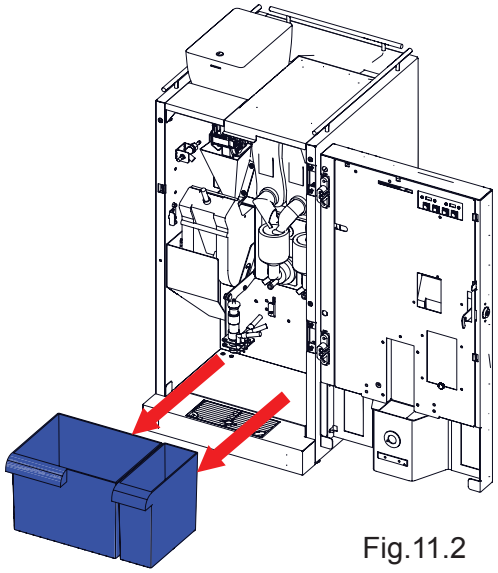

Fig.11.2

11.2.1.4 Drop tray and tray grill (see fig. 11.3)

1. Open the vending machine door
2. Remove the drop tray by pulling it on
3. Remove the grill from the tray casing, by inserting your fingers in the special openings in the corners of the grill
4. Clean the tray and grill by a rag, brush and washing agent of spilled drinks residues
5. Wipe the grill and tray and install them back into the vending machine

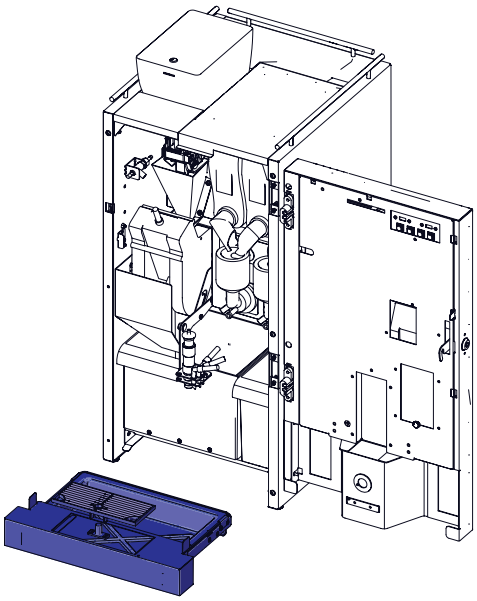

Fig.11.3

11.2.1.5 Cup tray (see fig. 11.4)

Clean the tray of dirt by using a rag and washing agent.

11.2.1.6 Milk container (for FRESH MILK only)

1. Open the cooler door
2. Remove the milk container, pulling out the supply tube
3. Empty the container
4. Clean the container thoroughly with a rag and washing agent and wash the container with clean water
5. Fill the container with fresh precooled milk
6. Place the container back into the cooler and put in the supply tube

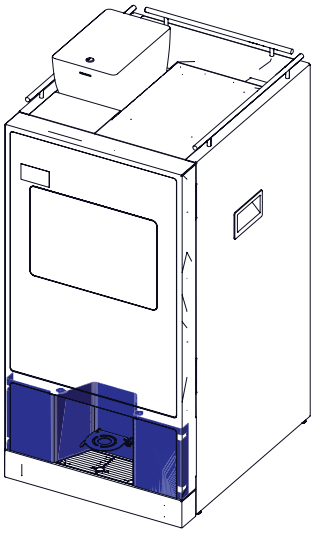

Fig.11.4

11.2.2 Daily operations

11.2.2.1 Milk flow meter (FRESH MILK, option)

ATTENTION! Conduct flow meter cleaning at least once a week!

1. Switch the vending machine off by turning the switch at the rear wall to the “0” position.
2. Open the door.
3. Disconnect the milk circuit (1 and 2) from the flow meter (see fig. 11.5).

Fig.11.5

4. Remove the screw (3) (see fig. 11.6).

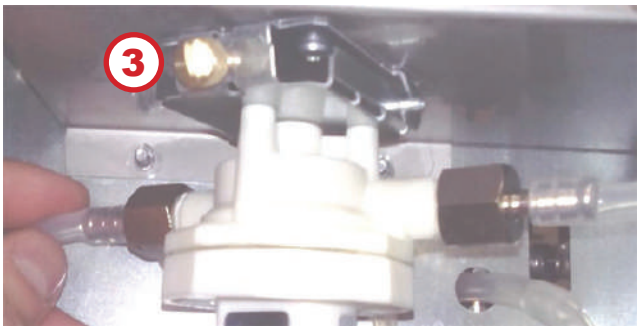

Fig.11.6

5. Disconnect the connector (4) (see fig. 11.7).

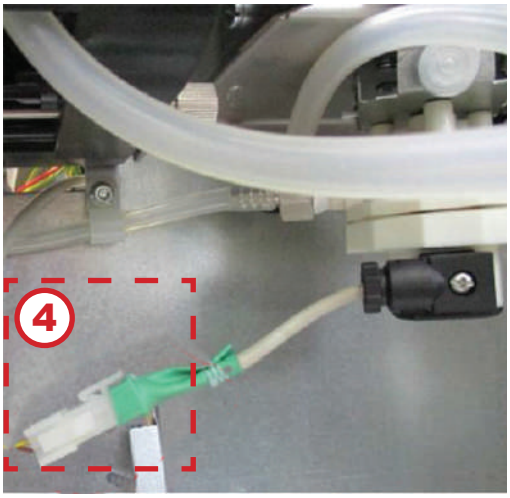

Fig.11.7

6. Turn the flow meter cover all the way out and remove it from the case (see fig. 11.9 and fig. 11.10).

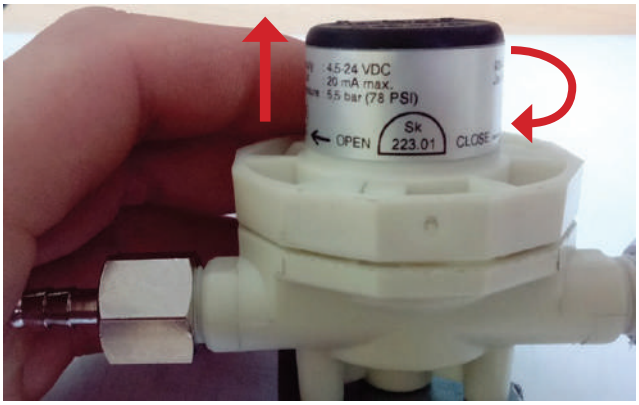

Fig.11.8

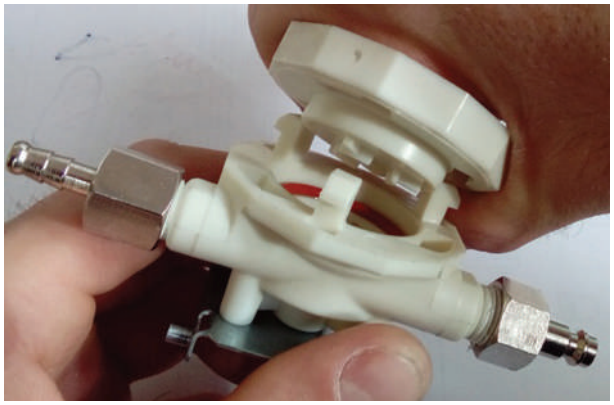

Fig.11.9

7. Clean the flow meter inside parts (see fig. 11.10)
- case -1
- gasket - 2
- impeller - 3

These items can be washed by water flowing from a tap.

It's PROHIBITED to wash the cover (4) in flowing water or submerge in water! Clean the cover with damp cloth.

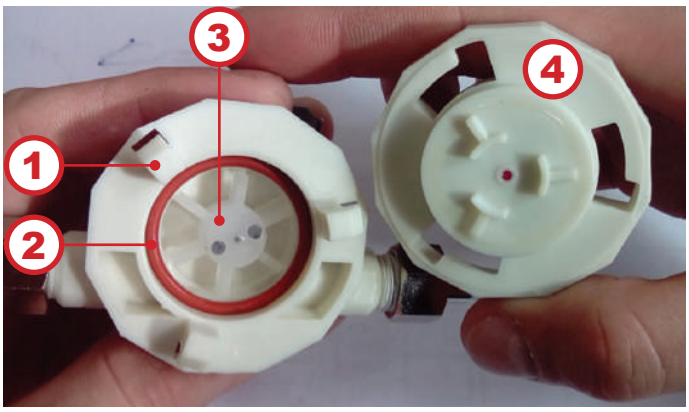

Fig.11.10

8. After cleaning the flow meter, assemble it in the reverse order. Then mount the flow meter on the vending machine and connect it in accordance with the hydraulic circuit.

11.2.2.2 Check valve (FRESH MILK)

If constantly washing the milk system by using the special agent the separate washing of the check valve is not required.

The valve case is semitransparent, so one can see if the cultured milk product is formed inside the valve.

To wash the clogged valve prepare the washing agent solution and soak the valve in the washing solution for 2-3 hours.

It's recommended to conduct washing by using the solution, prepared from the following concentrates: Franke Milchreiniger, Specialcleaner for milksystems (Schulz&Sohn GmbH).

After the washing connect the valve to the hot water supply tube by replacing the nozzle with the valve. Then flush the valve by the hot water flow from the vending machine. The arrow on the valve should be pointed in the direction of the water outflow.

Note: This is an "emergency" method. There's no need to adopt this method for everyday check valve washing as part of the milk circuit.

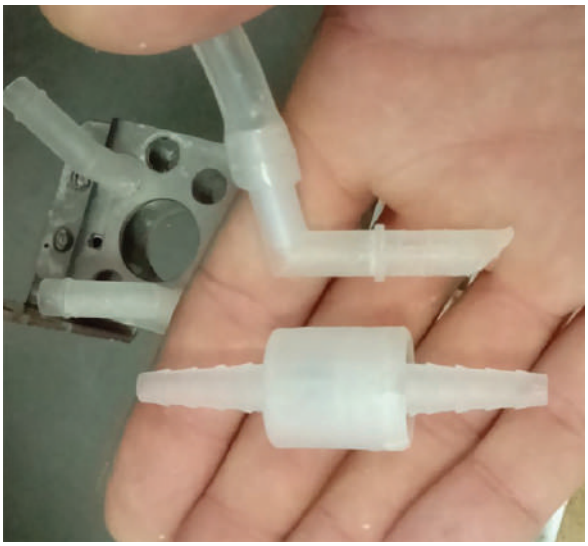

Fig.11.11

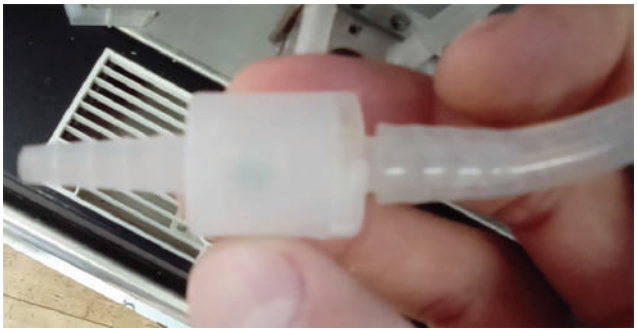

Fig.11.12

11.2.2.3 Containers for soluble ingredients (see fig. 11.13)

1. Open the vending machine door.
2. Raise the upper vending machine cover to gain access to the containers.
3. Remove the containers from the vending machine (see section 5.5).
4. Empty the containers.
5. Clean the containers by hot water with a washing agent. Then rinse the containers with hot water.
6. Dry the containers thoroughly, wiping them dry with disposable towels. Make sure that the containers are completely dry.
7. Place the containers back into the vending machine.
8. Load the containers with soluble ingredients (see section 5.5).

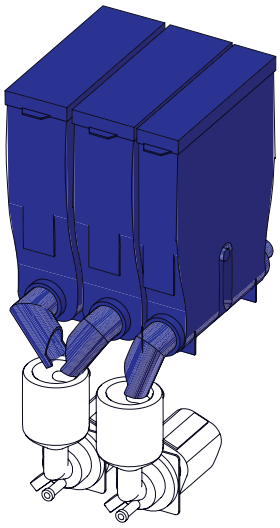

Fig.11.13

11.2.2.4 Coffee container (see fig. 11.14)

Clean the coffee container once a week.

1. Open the vending machine door.
2. Remove the cover by opening the container lock.
3. Remove the container from the vending machine (see section 5.5).
4. Empty the container.
5. Clean the container by hot water with a washing agent. Then rinse the containers with hot water.
6. Dry the container thoroughly, wiping it dry with disposable towels. Make sure that the container is completely dry.
7. Place the container back into the vending machine.
8. Load the container with coffee beans (see section 5.5).

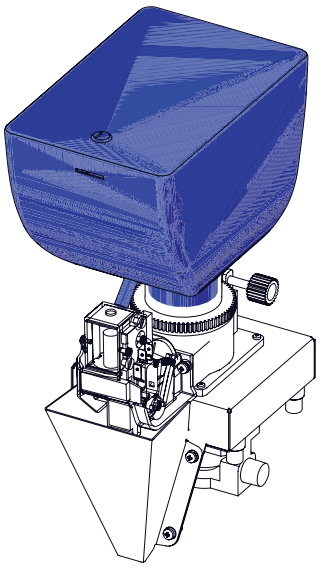

Fig.11.14

11.2.2.5 Mixer (see fig. 11.15)

1. Open the vending machine door.
2. Conduct the mixer removal operations (see section 5.10).
3. Clean: mixer funnel lid, mixer funnel, mixer impeller (not shown in the figure) by using hot water and the washing agent. Then rinse independent parts of the mixer by water and dry them thoroughly.
4. Assemble the mixer in reverse order and put it back into the vending machine (see section 5.10). Make sure that the mixer is installed correctly.

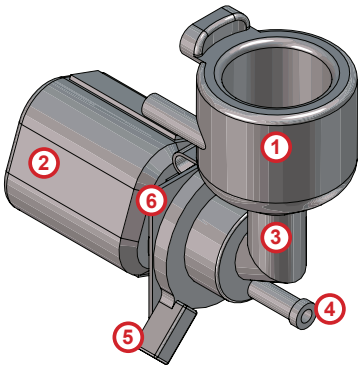

Fig.11.15

1. Mixer funnel lid
2. Mixer motor
3. Mixer funnel
4. Drink give out tube adapter
5. Mixer funnel lock

11.2.1.6 Cappuccinatore (FRESH MILK)

ATTENTION! The cappuccinatore washing should be conducted at least once a week or oftener, depending on the service conditions!

1. Switch the vending machine off by turning the switch at the rear wall to the “0” position.
2. Open the door.
3. Remove the cappuccinatore from the vending machine carefully, by disconnecting the steam and milk supply tubes.

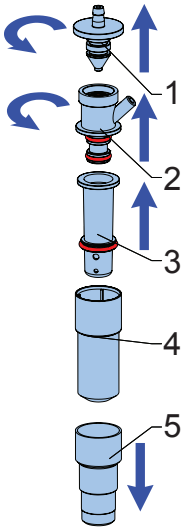

4. Disassemble, clean and assemble the cappuccinatore (see fig. 11.2):
   - by simultaneously turning and pulling on the part (1);
   - then simultaneously turning and pulling on the part (2);
   - separate the parts (3, 4 and 5);
   - wash all cappuccinatore parts by flowing warm water.
5. The cappuccinatore assembling is conducted in the reverse order.
6. Install the cappuccinatore into the vending machine and connect it in accordance with the hydraulic circuit.

Note: It’s permissible to use the washing agents applicable for plastic tableware. It’s permissible to use soft bottle-washing brushes.

Fig.11.16 - Cappuccinatore

11.3 Ingredients weighing

To ensure precise ingredients dosage it's necessary to conduct periodical weighing of the ingredients, used for making drinks.

Ground coffee dosage weighing (not INSTANT):

1. Remove the espresso group (see section 5.9)
2. Place a container under the dosing unit funnel
3. Enter the menu technician (see the Manual) into the **Recipes** section
4. From this page choose the coffee beans based drink (1) and press the **Test Coffee** button
5. Conduct the coffee weighing

Note:

1. To conduct more correct measurement make **5 - 10 weighings** and calculate the mean.
2. Setting the dosing unit cam into position 5 or 6 without the brewing camera volume increase is **PROHIBITED - THIS MAY LEAD TO ESPRESSO GROUP BREAKAGE!**

Setting the dosing unit cam into position 7 or higher is STRICTLY PROHIBITED under any conditions!!!

Soluble ingredients dosage weighing:

1. Remove the lid of the mixer, located under the container with the verified ingredient.
2. Place a container under the container with the ingredient.
3. Enter the menu technician (see the Manual) into the **Recipes** section.
4. From this page choose the soluble ingredient based drink and press the **Test Powder** button.
5. Conduct the ingredient weighing.

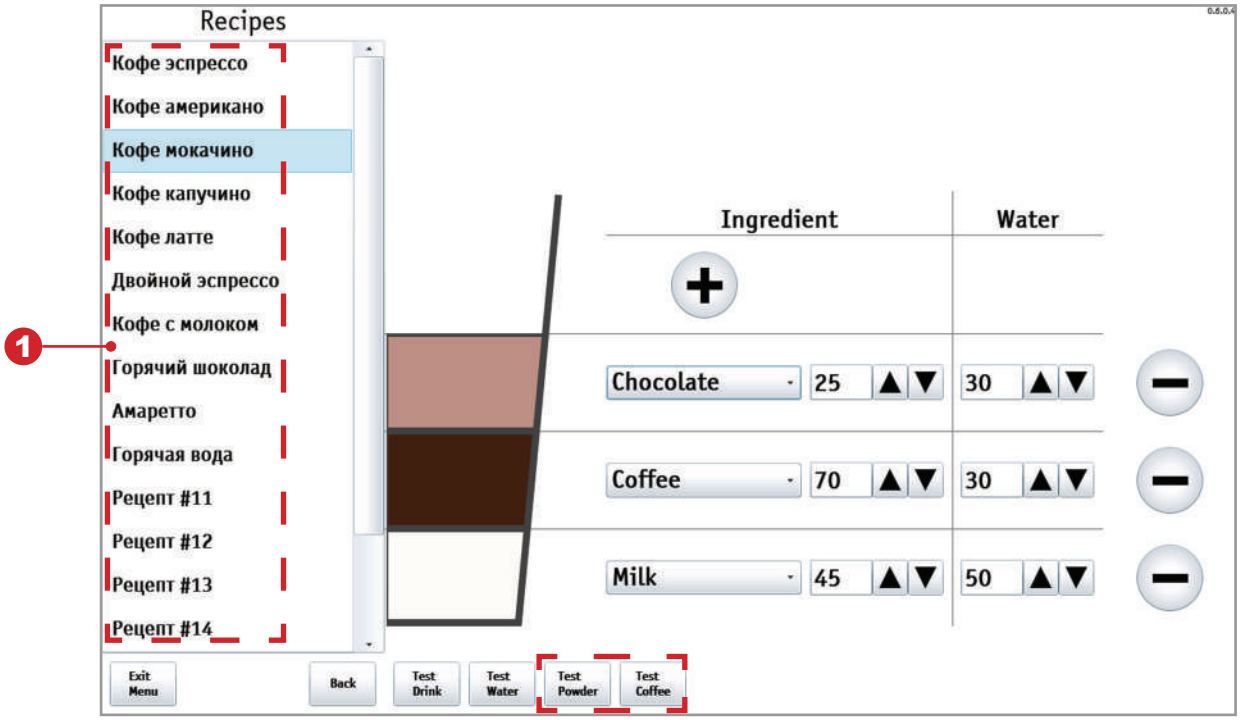

Fig.11.5 - Ingredients weighing

12.0 VENDING MACHINE WASHING

To wash the drink making and pouring systems:

Method #1

1. Open the vending machine door.
2. Insert the service key into the door trip.
3. Press the **Flushing** button on the quick access keypad (see fig. 5.2 pos. 10 and fig. 6.2).
4. The washing menu page will appear (see fig. 12a and 12b).
5. Conduct washing by pressing the required button.

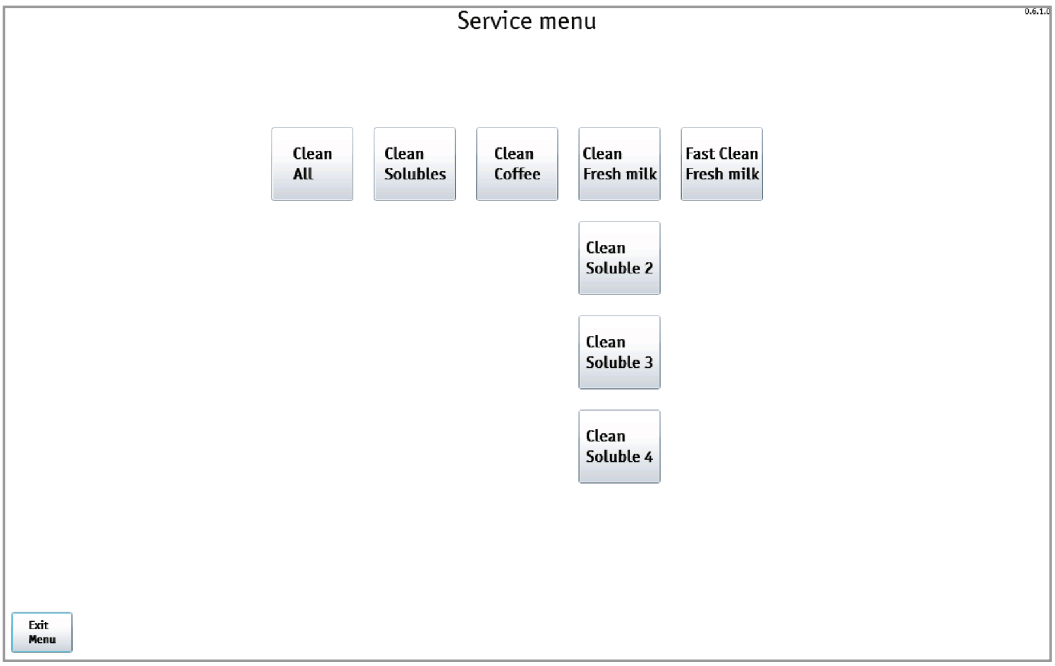

Fig.12a - Flushing (option FRESH MILK)

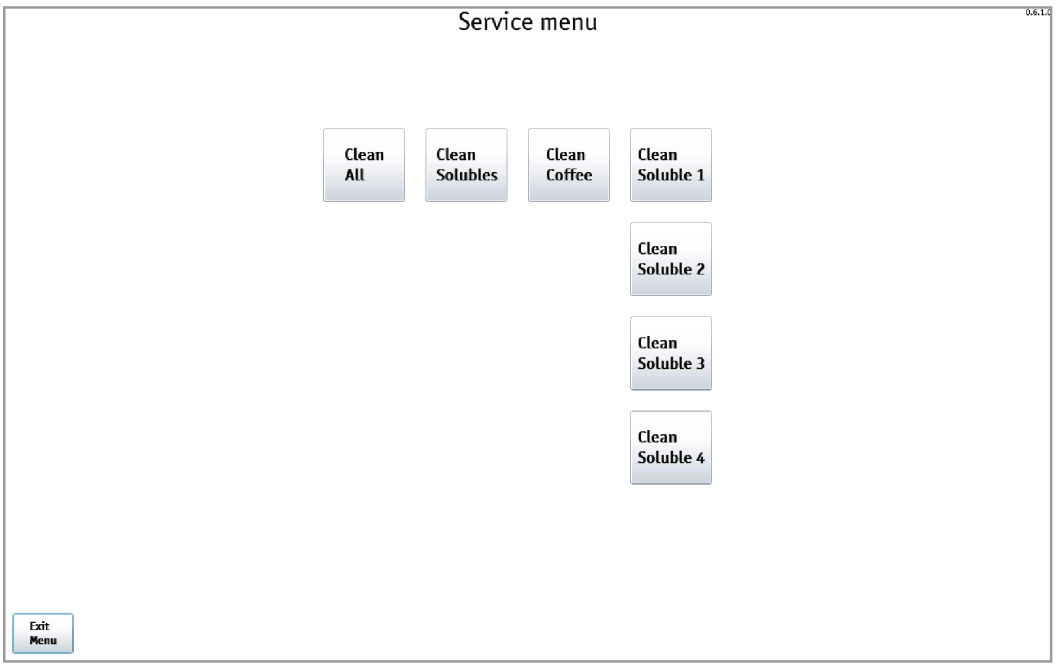

Fig.12b - Flushing

BUTTON	DESCRIPTION
Clean All	Cleaning the drink preparation and dispensing systems
Clean Solubles	Start flushing of instant drink dispensing system
Clean Coffee	Start flushing the ground coffee feed system
Clean Fresh milk	Start flushing the fresh milk supply systems (only FRESH MILK).
Clean Soluble 1...4	Start flushing the instant drink 1...4 dispensing system
Fast Clean Fresh milk	Fresh milk supply system fast cleaning (for FRESH MILK only) without a washing agent.

Method #2

1. Open the vending machine door.
2. Insert the service key into the door trip.
3. Press the Menu technician or Operator menu button on the quick access keypad (see fig. 5.2 pos. 10 and fig. 6.2).
4. Choose the **Cleaning** section from the corresponding menu.
5. The washing menu page will appear (see fig. 12a and 12b).
6. Conduct washing by pressing the required button.

13.0 WORKING WITH USB FLASH DRIVE

The machine's Regulator allows Machine's configuration, software updates and data recovery by exchanging files using a USB drive (flash drive).

The drive is connected to the USB MB connector, located on the vending machine door inner surface (see fig. 5.2 pos. 10 and fig. 13). The connection should be made when in vending mode.

When you connect the USB drive the Machine's screen will show relevant information about the drive.

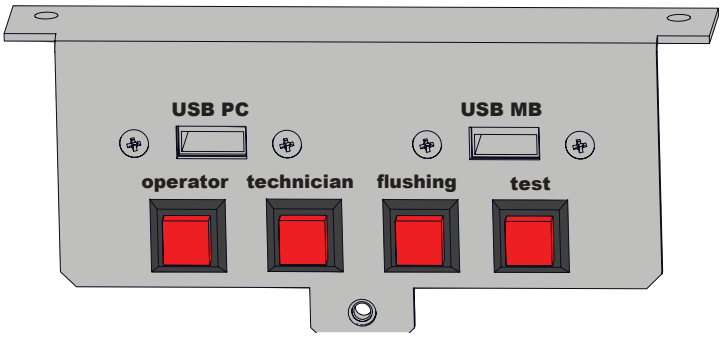

Fig.13.1 - Connector USB

To work with the machine is only suitable USB-flash drives! Disk drives and flash drives are not supported. Supports USB-flash drives with FAT16 or FAT32. Other file systems (including NTFS) not supported!

Information that can be read on the USB-flash drive with the machine:

Statistical data (Audit): Information about the Machine's operations, sales, equipment functioning and logs. Stored in a file format EVA-DTS, file name:Axxmmddi.DTS. If the Machine's clock's not working the file name will be Axx_i.DTS.

- xx = 2 last two digits of the serial number, set in the Technician's menu.

- mm = Month (if date and time are set for the Machine)

- dd = Day (if date and time are set)

- i = digit from 0 to 9. You can save up to 10 files with different names in 24 hours.

To read the information you want to insert USB-flash drive into the connector of the controller board in the trade regime and approve the request: **Save audit**?

The current configuration: File format EVA-DTS. File name: Cxxxxxxx.DTS, C then the 7-digit serial number of the machine, specified (for example: C0000123.DTS).

This file contains equipment configuration information, as well as information about the names, placements and prices of products.

The configuration file may include the user images of drinks, which were loaded by using the Planogram menu. Check the image to activate **Images are imported** - (see fig. 13.2).

Note: The images will be lost if the configuration file will be opened and saved in the Configurator program later.

To read the information open the vending machine door, insert the service key into the door trip, insert the USB flash drive into the USB connector (see fig. 13) when in vending mode and confirm the request on the **Save configuration file to USB**?

To load drinks images, video files, shown when making drinks, computer programs, updating the program interface, it's necessary to connect the USB flash drive to the USB PC connector (see fig. 13.1)! To work with audit and configuration files (see section 13.0) the USB flash drive should be connected to the USB MB connector (see fig. 13.1).

Information that can be downloaded from the USB-flash drive into the machine:

Configuration of a certain Machine: The EVA-DTS format file. File name: Cxxxxxxx.DTS, with 7-digit vending machine serial number, specified in the menu technician General - Machine number setup section. E.g.: C0000123.DTS. The file will be loaded into the vending machine only if it matches the number specified in the Vending machine number setting and in the file name. This will permit loading different configurations for different vending machines from the same USB flash drive.

To download the information you want to insert USB-flash drive into the connector of the controller board in the trade regime and approve the request: **Load Configuration**?

General configuration: File format EVA-DTS. File name: CONF_GEN.DTS.

To download the information you want to insert USB-flash drive into the connector of the controller board in the trade regime and approve the request: **Load Gen. Config**.?

Software updating: To update the vending machine software go to the manufacturer's website http://www.unicum.ru/en/ into the **SUPPORT** section and choose the technical documentation for the required vending machine model. Then choose the Machine Firmware. The automatic downloading of files to the PC will start. The files are downloaded as an archived folder. To record the files to the USB flash drive, decompress the folder first and then save the folder contents in the root directory of the USB flash drive. In the archived folder, there are the files for software update with explanatory text files.

To update the vending machine software insert the USB flash drive with saved files to the USB connector (see fig. 13). When these files are detected by the controller, the message asking for software updating will appear. To download the power board must approve the request: **Load Hot Firmware?**

To download the software of the main board machine must approve the request:: **MainBoard FIRMWARE?**

Editing configuration files, and view audit files by using a special program "Unicum Vending Machine Tools, which can be downloaded here: **https://uonline.unicum.ru/ef/tools/uVMTools.msi**

APPENDIX A - HYDRAULIC CIRCUIT FUNCTIONAL CHECK METHOD

The vending machine hydraulic circuit is a set of assemblies and pipes, meant for making and giving out of drinks.

The hydraulic circuit principle of operation is the following:

When connecting the vending machine to the water supply network, water is supplied through the water supply solenoid valve.

When connecting the vending machine to the autonomous water supply system from canisters/bottles - water is pumped into the hydraulic circuit by using the delivery water pump.

Then water is supplied via the tubes to the vending machine float chamber and water filter, water meter and water pump into the boiler.

In the FRESH MILK option water is supplied via the tubes to the vending machine float chamber and via the water filter to the splitter, where it's split into two lines: the first one is via the water meter and water pump into the boiler, and another one – via the water pump into the steam boiler.

The boiler heats the water up to the required temperature and then depending on the chosen drink it is supplied to one of the four boiler channels: to espresso group, (Coffee) mixer (for NERO INSTANT), (Chocolate/Milk) mixer, (Vanilla) mixer, or directly to the output nozzle (when choosing the hot water), where the mixing with the required ingredient and giving out of the chosen drink to the customer via the output nozzles occurs.

In the steam boiler water is heated up to steam condition and then via the steam supply valve (the valve has to positions – open/close) is supplied to the cappuccinatore, where milk is also supplied. In the cappuccinatore, the milk foaming occurs with subsequent foam supplying into a drink.

Excess water and steam (FRESH MILK option) are supplied to the waste container.

Since the vending machine hydraulic system uses hot water under certain pressure, the essential condition for providing safe and dependable operation of the vending machine is the successful operation of the hydraulic system, which should be regularly checked in accordance with methods, specified in the appendix, and follow all the requirements put down in this manual.

The vending machine hydraulic system operation check should be executed with the open door with the inserted open door trip.

Before starting the vending machine for the first time visually check that all the hydraulic circuit elements are securely interconnected, and water supply connection parameters correspond with the parameters, specified in this manual. Failure to follow these requirements can lead to vending machine breakdown.

When starting the vending machine for the first time visually check the system has no leaks.

Pay particular attention to the boiler and steam boiler (FRESH MILK option) because these units heat water to high temperatures.

Visually check that there are no leaks at the boiler joints, otherwise the further operation of the vending machines until the malfunction repair is PROHIBITED.

The boiler and steam boiler (FRESH MILK option), used in the vending machines, are meant for safe operation with the rated pressure much higher than the operating pressure.

For safe boiler maintenance and repair, the vending machine should be disconnected from mains, and water should be drained from the hydraulic system in accordance with this manual.

DISMANTLING THE BOILER BEFORE IT'S FULLY DRAINED IS PROHIBITED!

Boilers installed in the vending machines should undergo detailed examination, conducted in two stages:

Stage #1 - the examination is conducted on "cold boiler", the boiler should be disconnected from the system. On this stage, the boiler is thoroughly inspected to eliminate the facts of corrosion, erosion, deformation, cracks and other external defects.

Stage #2 - the examination is conducted on "hot boiler", the boiler should be connected to the system. The vending machine should be connected to the water and electrical supply and switched on.

The examination should be executed by using the soapy water for clear identification of leaks in case of their detection. After such examination, flush the hydraulic circuit several times in accordance with this manual.

At this stage, the boiler operation in the system, together with safety elements are thoroughly inspected.

To prevent scale formation on the boiler heating element, which may lead to vending machine breakage, flush the vending machine system by special anti-scaling agents that are suitable for vending machines at least once a month or oftener, depending on the characteristics of water, used in the vending machine.

The vending machine operators should undergo appropriate training for conducting maintenance and working with the vending machine hydraulic system, as well as understand all hazards that may arise from incorrect vending machine use.

The system is considered operable if the following conditions are fulfilled:

- there are no external damages, hardware and subsystem deformations;
- all connections are tight;
- after connecting the system to the water supply network or starting the vending machine the system has no leakages;
- all system components are faultless.